Product Data Sheet

1152 Anti-Friction Caster Series

QPU (Brown Flat) Wheel Diameter x Wheel Width 100 x 50mm

EAN

KS-11520400531021

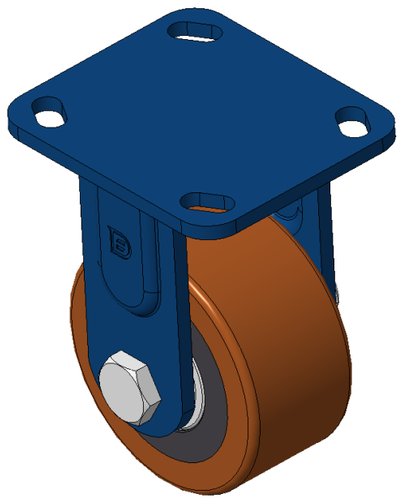

Picture may differ from original product

Rigid Caster, Welded Caster Fork - 85x70 Bolt Hole Spacing
Blue painted finish, Mounting Type - Top Plate
Cast Iron core, High Quality Polyurethane Wheel Tread
Cast Iron brown, Bearing - Ball Bearings.

Wheel Tread: Hhigh-Quality Polyurethane

Wheel Center: iron core/cast iron core

Drawings are for reference only and may differ from the product

Technical Data

◉ Metric ○ Imperial

Wheel Diameter	100mm
Wheel Width	50mm
Wheel Bearing	Wheels With Ball Bearings
Plate Size	115 x 100mm
Bolt Hole Spacing	85 x 70mm
Plate Hole	20 x 11mm
Overall Height	148mm
Hardness Of Tread	92±5° Shore A
Load Capacity (Dynamic)	500kgs
Load Capacity (Static)	750kgs
Temperature	-20°C to +70°C
Fork Type	Rigid Caster
Stainless	N/A
Electrical Conductivity	N/A
Anti-Static	N/A
Weight	2.13kgs
Standard	ISO22883

Advantages at a glance

Rolling Resistance	● ● ● ● ●
Operating Noise	● ● ● ● ●
Floor Surface Preservation	● ● ● ● ●

Dimensions

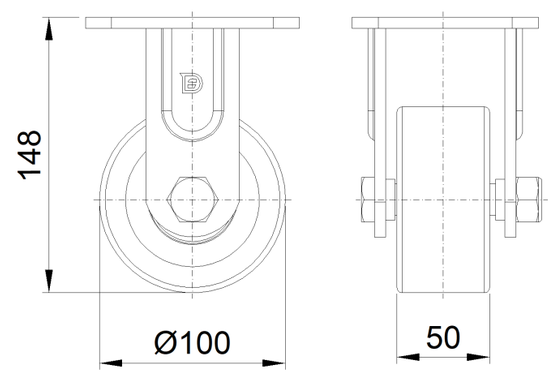

Mounting

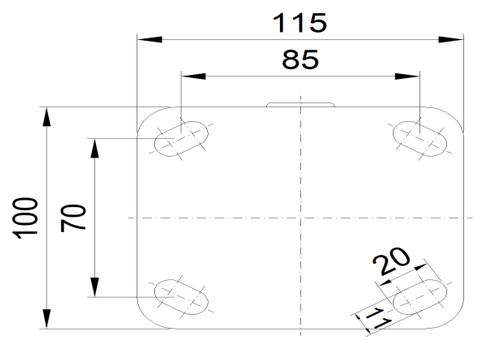

* For any deviation between metric and imperial spec, please refer to the metric spec.

© Copyright 2025 DershengInternational www.dersheng.com