1148-1 48 Series Central Locking Caster Series (All Plastic)

Central Control Double-Ball Classic PPR Wheel (White-Dark Gray) Wheel Diameter × Wheel Width 125 × 1

EAN

KS-11480501268223



Picture may differ from original product

Drawings are for reference only and may differ from the product

Technical Data

◉ Metric ○ Imperial

Wheel Diameter	125mm
Wheel Width	18mm
Wheel Bearing	Wheels With Ball Bearings
Stem Diameter	28mm
Stem Length	96mm
Offset	38.5mm
Swivel Interference	214mm
Overall Height	150mm
Swivel Radius	107mm
Hardness Of Tread	82±5° Shore A
Load Capacity (Dynamic)	150kgs
Load Capacity (Static)	225kgs
Temperature	-20°C to +60°C
Fork Type	Swivel Caster With Total Brake
Stainless	N/A
Electrical Conductivity	N/A
Anti-Static	N/A
Weight	0.98kgs
Standard	ISO22881

Advantages at a glance

Rolling Resistance	●●●●○
Operating Noise	●●●●○
Floor Surface Preservation	●●●●●

Dimensions

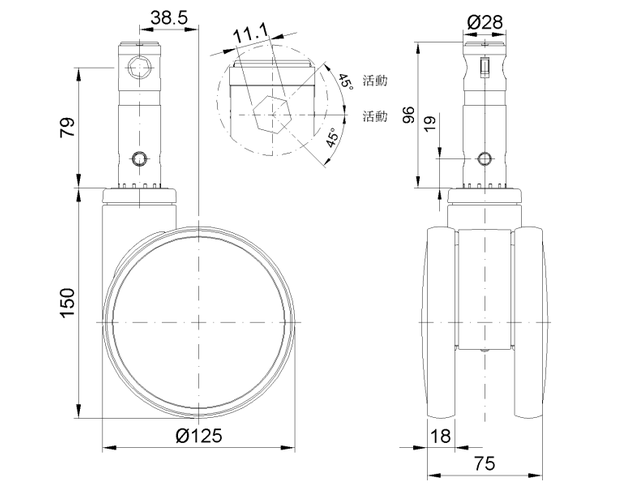

Mounting

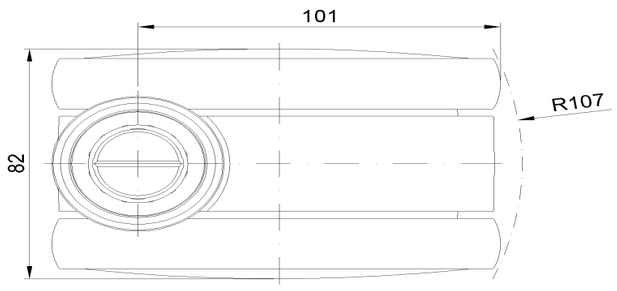

* For any deviation between metric and imperial spec, please refer to the metric spec.

© Copyright 2026 DershengInternational www.dersheng.com