# 1146 46 Ascendant Series Caster Series(All Plastic)

Double-Ball Full-Effect Wheel (White-Dark Gray) Wheel Diameter × Wheel Width 125 × 18mm

EAN

KS-11460500455583

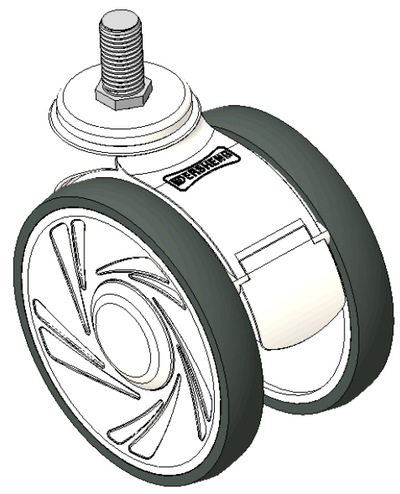

Drawings are for reference only and may differ from the product

Picture may differ from original product

## Technical Data

◉ Metric ○ Imperial

| | |
|---|---|
| Wheel Diameter | 125mm |
| Wheel Width | 85.5mm |
| Wheel Bearing | Wheels With Ball Bearings |
| Threaded Stem | M16 |
| Threaded Length | 30mm |
| Offset | 40mm |
| Swivel Interference | 220mm |
| Overall Height | 141mm |
| Swivel Radius | 110mm |
| Hardness Of Tread | 72±5° Shore A |
| Load Capacity (Dynamic) | 110kgs |
| Load Capacity (Static) | 165kgs |
| Temperature | -20°C to +60°C |
| Fork Type | Swivel Caster |
| Stainless | N/A |
| Electrical Conductivity | N/A |
| Anti-Static | N/A |
| Weight | 0.66kgs |
| Standard | ISO22881 |

## Advantages at a glance

| | |
|---|---|
| Rolling Resistance | ●●●●● |
| Operating Noise | ●●●●● |
| Floor Surface Preservation | ●●●●● |

## Dimensions

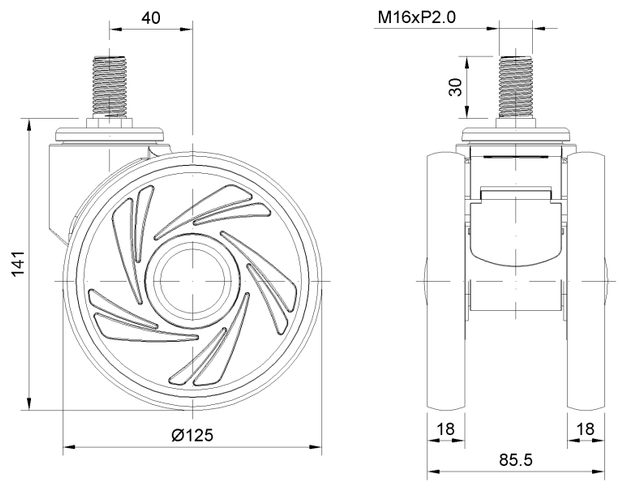


## Mounting

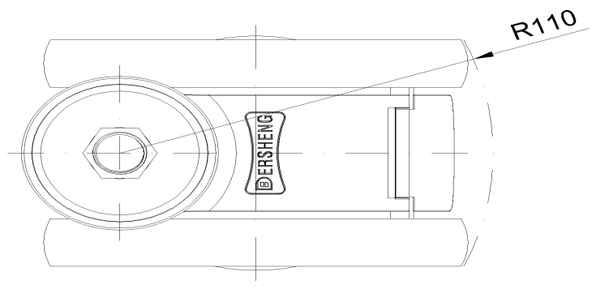


* For any deviation between metric and imperial spec, please refer to the metric spec.

© Copyright 2026 DershengInternational www.dersheng.com