1146 46 Ascendant Series Caster Series(All Plastic)

Resolute Rubber wheel (window gray dark gray) Wheel Diameter x Wheel Width 100 x 18mm

EAN

KS-11460400456173

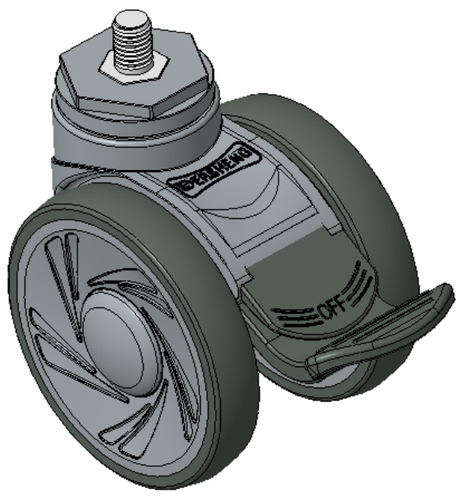

Picture may differ from original product

Drawings are for reference only and may differ from the product

Technical Data

◉ Imperial ○ Metric

Wheel Diameter	4 "
Wheel Width	3-3/8 "
Wheel Bearing	Wheels With Ball Bearings
Threaded Stem	M12
Threaded Length	11/16 "
Offset	1-5/16 "
Swivel Interference	10 "
Overall Height	4-13/16 "
Swivel Radius	5 "
Hardness Of Tread	72±5° Shore A
Load Capacity (Dynamic)	220lbs
Load Capacity (Static)	331lbs
Temperature	-4°F to +140°F
Fork Type	Swivel Caster With Total Brake
Stainless	N/A
Electrical Conductivity	N/A
Anti-Static	N/A
Weight	1.6lbs
Standard	ISO22881

Advantages at a glance

Rolling Resistance	●●●●●
Operating Noise	●●●●●
Floor Surface Preservation	●●●●●

Dimensions

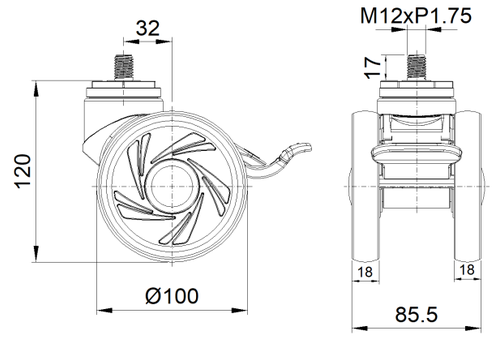

Mounting

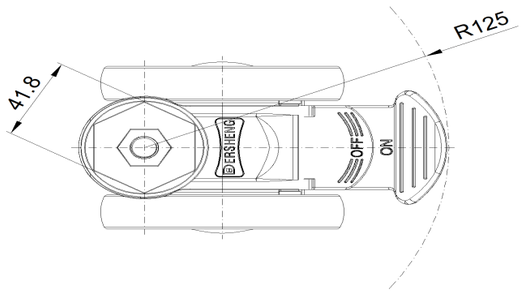

* For any deviation between metric and imperial spec, please refer to the metric spec.

© Copyright 2026 DershengInternational www.dersheng.com