1146 46 Ascendant Series Caster Series(All Plastic)

Double-Ball Full-Effect Wheel (White-Dark Gray) Wheel Diameter × Wheel Width 100 × 18mm

EAN

KS-11460400454013

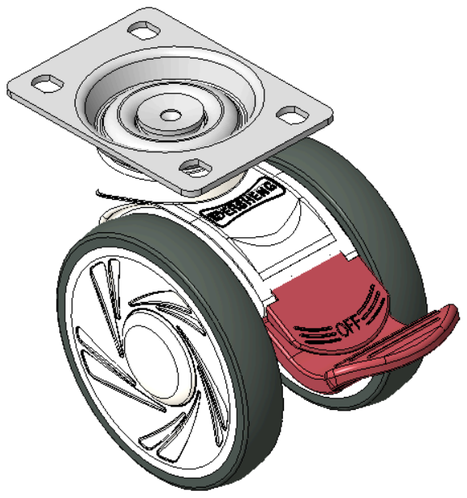

Drawings are for reference only and may differ from the product

Picture may differ from original product

Technical Data

◉ Metric ○ Imperial

Wheel Diameter	100mm
Wheel Width	85.5mm
Wheel Bearing	Wheels With Ball Bearings
Plate Size	96 x 69mm
Bolt Hole Spacing	75 x 45mm
Plate Hole	11 x 8.6mm
Offset	32mm
Swivel Interference	250mm
Overall Height	123mm
Swivel Radius	125mm
Hardness Of Tread	72±5° Shore A
Load Capacity (Dynamic)	100kgs
Load Capacity (Static)	150kgs
Temperature	-20°C to +60°C
Fork Type	Swivel Caster With Total Brake
Stainless	N/A
Electrical Conductivity	N/A
Anti-Static	N/A
Weight	0.86kgs
Standard	ISO22881

Advantages at a glance

Rolling Resistance	●●●●●
Operating Noise	●●●●●
Floor Surface Preservation	●●●●●

Dimensions

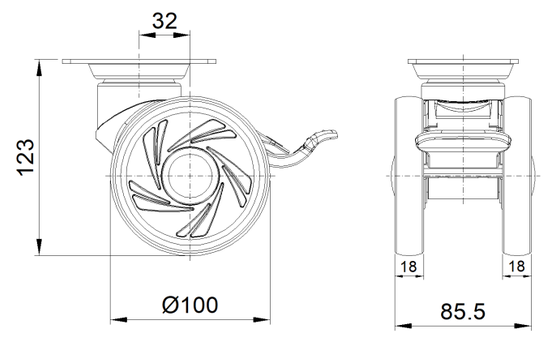

Mounting

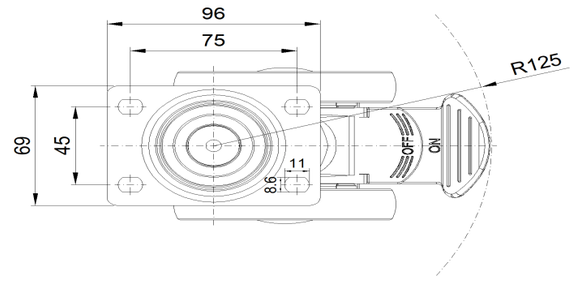

* For any deviation between metric and imperial spec, please refer to the metric spec.

© Copyright 2026 DershengInternational www.dersheng.com