# 1146 46 Ascendant Series Caster Series(All Plastic)

Double-Ball Full-Effect Wheel (All-Black) Wheel Diameter × Wheel Width 75 × 14mm

EAN

KS-11460300454123




Drawings are for reference only and may differ from the product

Picture may differ from original product

## Technical Data

◉ Metric ○ Imperial

| | |
|---|---|
| Wheel Diameter | 75mm |
| Wheel Width | 60mm |
| Wheel Bearing | Wheels With Ball Bearings |
| Plate Size | 60 x 60mm |
| Bolt Hole Spacing | 42.5x42.5mm |
| Plate Hole | 11 x 6mm |
| Offset | 23mm |
| Swivel Interference | 179mm |
| Overall Height | 91mm |
| Swivel Radius | 89.5mm |
| Hardness Of Tread | 72±5° Shore A |
| Load Capacity (Dynamic) | 90kgs |
| Load Capacity (Static) | 135kgs |
| Temperature | -20°C to +60°C |
| Fork Type | Swivel Caster With Total Brake |
| Stainless | N/A |
| Electrical Conductivity | N/A |
| Anti-Static | N/A |
| Weight | 0.38kgs |
| Standard | ISO22881 |

## Advantages at a glance

| | |
|---|---|
| Rolling Resistance | ●●●●● |
| Operating Noise | ●●●●● |
| Floor Surface Preservation | ●●●●● |

## Dimensions

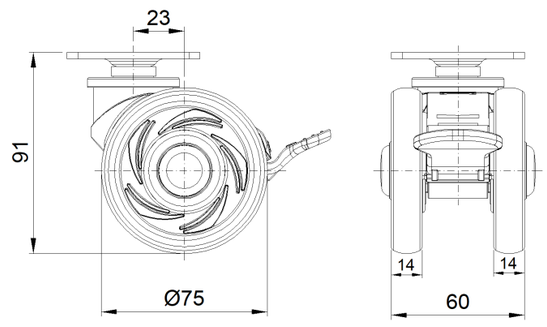


## Mounting

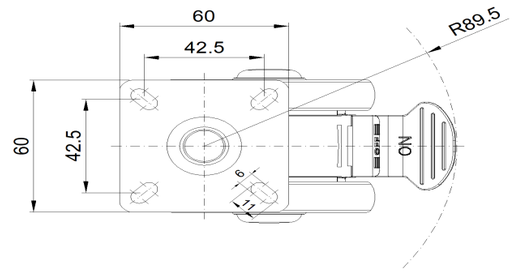


* For any deviation between metric and imperial spec, please refer to the metric spec.

© Copyright 2026 DershengInternational www.dersheng.com