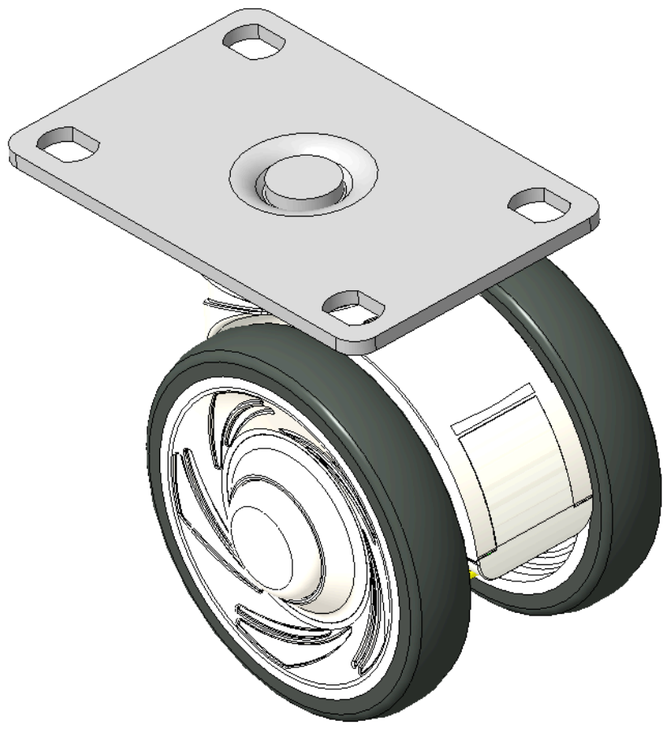

Picture may differ from original product



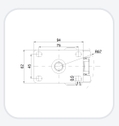

1146 46 Ascendant Series Caster Series(All Plastic)

Double-Ball Full-Effect Wheel (White-Dark Gray) Wheel Diameter × Wheel Width 75 × 14mm

KS-11460300452083 Copy model no.

Wheel Diameter	Load Capacity (Dynamic)	Overall Height	Wheel Bearing
75mm	90kgs	90mm	Wheels With Ball Bearings

Product descriptions are for reference only. The actual product shall prevail.

Product Data Sheet

Wheel Diameter	**75mm**	Wheel Width	**60mm**
Wheel Bearing	**Wheels With Ball Bearings**	Plate Size	**94 x 62mm**
Bolt Hole Spacing	**75 x 45mm**	Plate Hole	**11 x 8.6mm**
Offset	**23mm**	Swivel Interference	**134mm**
Overall Height	**90mm**	Swivel Radius	**67mm**
Hardness Of Tread	**° Shore A**	Load Capacity (Dynamic)	**90kgs**
Load Capacity (Static)	**135kgs**	Temperature	
Fork Type	**Swivel Caster**	Stainless	**N/A**
Electrical Conductivity	**N/A**	Anti-Static	**N/A**
Weight	**0.32kgs**	Standard	**ISO22881**

* For any deviation between metric and imperial spec, please refer to the metric spec.

Performance

Rolling Resistance ●●●●○	Operating Noise ●●●●○	Floor Surface Preservation ●●●●●

© 2026 DERSHENG CO., LTD. All rights reserved.