1146 46 Ascendant Series Caster Series(All Plastic)

Double-Ball Full-Effect Wheel (All-Black) Wheel Diameter × Wheel Width 75 × 14mm

EAN

KS-11460300451043

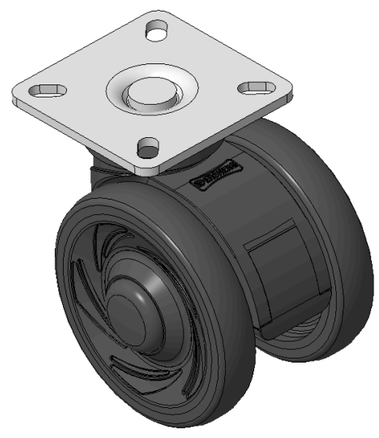

Drawings are for reference only and may differ from the product

Picture may differ from original product

Technical Data

◉ Metric ○ Imperial

Wheel Diameter	75mm
Wheel Width	60mm
Wheel Bearing	Wheels With Ball Bearings
Plate Size	60 x 60mm
Bolt Hole Spacing	42.5x42.5mm
Plate Hole	11 x 6mm
Overall Height	91mm
Hardness Of Tread	72±5° Shore A
Load Capacity (Dynamic)	90kgs
Load Capacity (Static)	135kgs
Temperature	-20°C to +60°C
Fork Type	Rigid Caster
Stainless	N/A
Electrical Conductivity	N/A
Anti-Static	N/A
Weight	0.32kgs
Standard	ISO22881

Advantages at a glance

Rolling Resistance	●●●●●
Operating Noise	●●●●●
Floor Surface Preservation	●●●●●

Dimensions

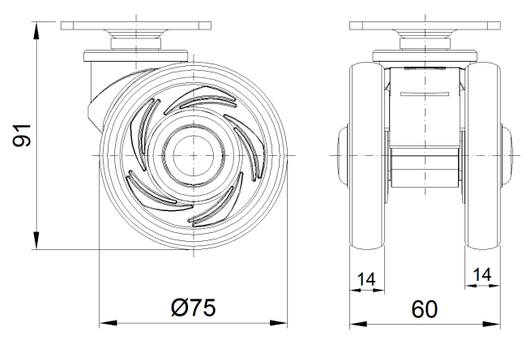

Mounting

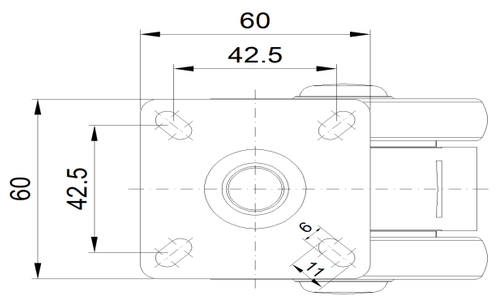

* For any deviation between metric and imperial spec, please refer to the metric spec.

© Copyright 2026 DershengInternational www.dersheng.com