Product Data Sheet

1141 Kingpinless Caster Series

MRC (Transparent) Wheel Diameter x Wheel Width 200 x 50mm

EAN

KS-11410800073013

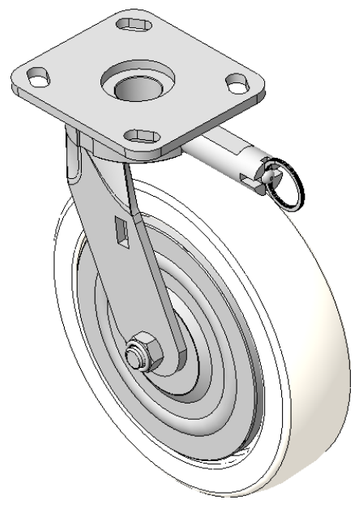

Picture may differ from original product

Casters with Directional Lock locking system, Welded Caster Fork Zine-Plated, Mounting Type - Top Plate, 85x70 Bolt Hole Spacing Reinforced Polypropylene, natural wheel tread Bearing—Ball Bearing

Wheel tread: Thermoplastic (PA6)

Wheel Center: Thermoplastic (PA6)

Drawings are for reference only and may differ from the product

Technical Data

◉ Metric ○ Imperial

Wheel Diameter	200mm
Wheel Width	50mm
Wheel Bearing	Wheels With Ball Bearings
Plate Size	115 x 100mm
Bolt Hole Spacing	85 x 70mm
Plate Hole	20 x 11mm
Offset	42.8mm
Swivel Interference	290mm
Overall Height	240mm
Swivel Radius	145mm
Hardness Of Tread	75±5° Shore D
Load Capacity (Dynamic)	450kgs
Load Capacity (Static)	675kgs
Temperature	-20°C to +80°C
Fork Type	Swivel Caster With Directional Lock
Stainless	N/A
Electrical Conductivity	N/A
Anti-Static	N/A
Weight	3.54kgs
Standard	ISO22883

Advantages at a glance

Rolling Resistance	● ● ● ● ●
Operating Noise	● ● ○ ○ ○
Floor Surface Preservation	● ● ○ ○ ○

Dimensions

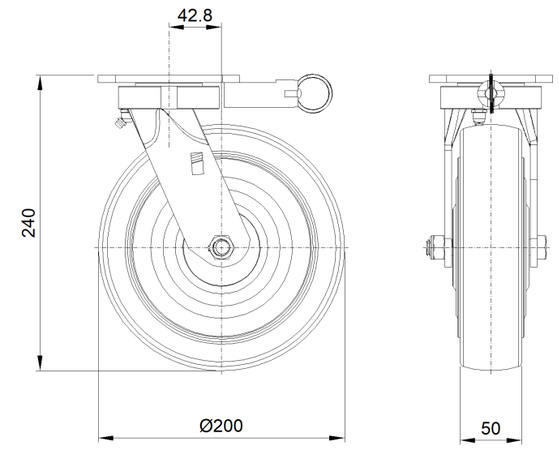

Mounting

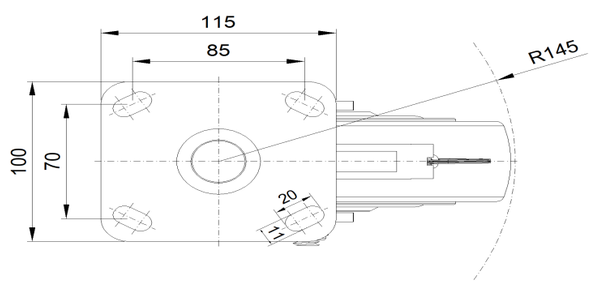

* For any deviation between metric and imperial spec, please refer to the metric spec.

© Copyright 2025 DershengInternational www.dersheng.com