1141 Kingpinless Caster Series

WHDR (pearl light gray) Wheel Diameter x Wheel Width 150 x 50mm

EAN

KS-11410600504723A

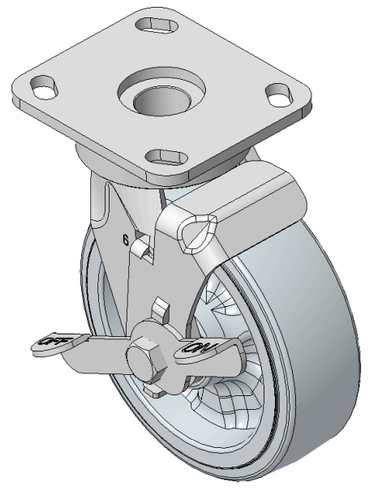

Picture may differ from original product

Drawings are for reference only and may differ from the product

Technical Data

◉ Metric ○ Imperial

Wheel Diameter	150mm
Wheel Width	50mm
Wheel Bearing	Wheels With Ball Bearings
Plate Size	115 x 100mm
Bolt Hole Spacing	85 x 70mm
Plate Hole	20 x 11mm
Offset	33.3mm
Swivel Interference	246mm
Overall Height	189mm
Swivel Radius	123mm
Hardness Of Tread	95±5° Shore A
Load Capacity (Dynamic)	408kgs
Load Capacity (Static)	612kgs
Temperature	-20°C to +60°C
Fork Type	Swivel Caster With Side Brake
Stainless	N/A
Electrical Conductivity	N/A
Anti-Static	N/A
Weight	2.85kgs
Standard	ISO22883

Advantages at a glance

Rolling Resistance	●●●●●
Operating Noise	●●●●●
Floor Surface Preservation	●●●●●

Dimensions

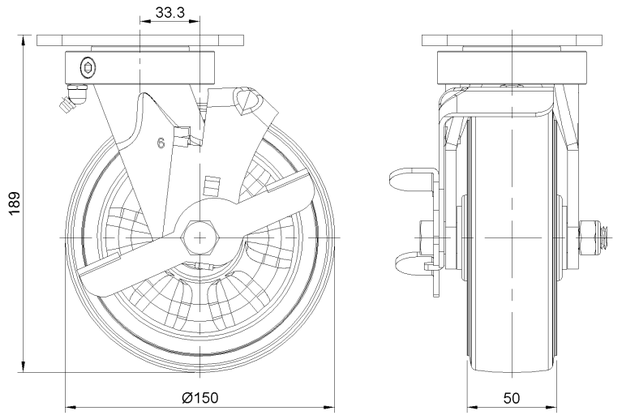

Mounting

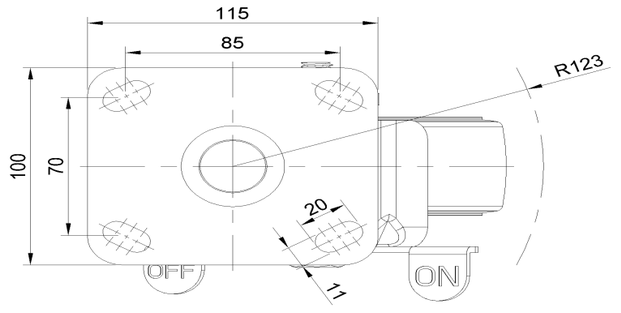

* For any deviation between metric and imperial spec, please refer to the metric spec.

© Copyright 2026 DershengInternational www.dersheng.com