1110-3 Series — Medi Series

PPR Wheel Hub (Matte Black) Wheel Diameter×Wheel Width 75×12mm

EAN

KS-11100302268033

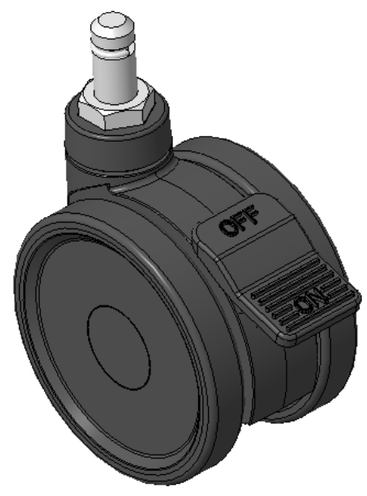

Drawings are for reference only and may differ from the product

Picture may differ from original product

Technical Data

◉ Imperial ○ Metric

Wheel Diameter	3 "
Wheel Width	2
Wheel Bearing	Wheel With Plain Bearing
Stem Diameter	3/8 "
Stem Length	7/8 "
Offset	7/8 "
Swivel Interference	6-5/16 "
Overall Height	4-9/16 "
Swivel Radius	3-1/8 "
Hardness Of Tread	82±5° Shore A
Load Capacity (Dynamic)	66lbs
Load Capacity (Static)	99lbs
Temperature	-4°F to +140°F
Fork Type	Swivel Caster With Total Brake
Stainless	N/A
Electrical Conductivity	N/A
Anti-Static	N/A
Weight	0.5lbs
Standard	ISO22881

Advantages at a glance

Rolling Resistance	● ● ● ● ○
Operating Noise	● ● ● ● ○
Floor Surface Preservation	● ● ● ● ●

Dimensions

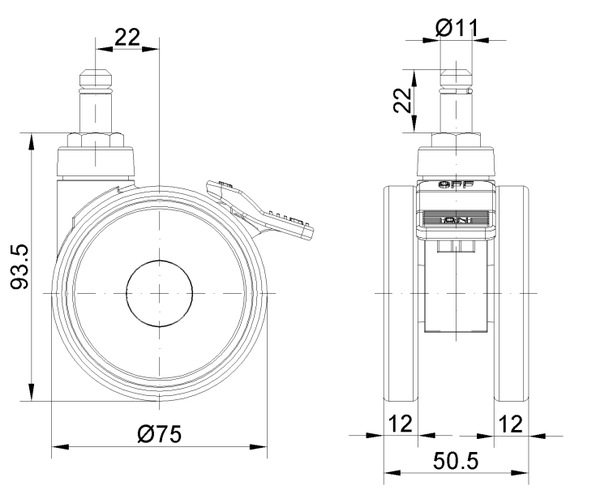

Mounting

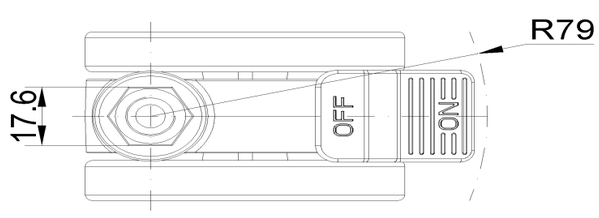

* For any deviation between metric and imperial spec, please refer to the metric spec.

© Copyright 2026 DershengInternational www.dersheng.com