1110-3 Series — Medi Series

PPR Wheel Hub (Matte Black) Wheel Diameter×Wheel Width 75×12mm

EAN

KS-11100302268033

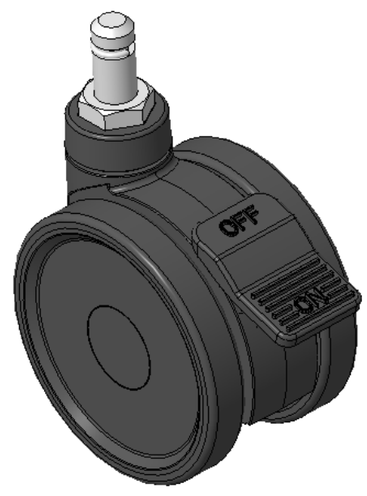

Drawings are for reference only and may differ from the product

Picture may differ from original product

Technical Data

◉ Metric ○ Imperial

Wheel Diameter	75mm
Wheel Width	50.5mm
Wheel Bearing	Wheel With Plain Bearing
Stem Diameter	11mm
Stem Length	22mm
Offset	22mm
Swivel Interference	158mm
Overall Height	93.5mm
Swivel Radius	79mm
Hardness Of Tread	82±5° Shore A
Load Capacity (Dynamic)	30kgs
Load Capacity (Static)	45kgs
Temperature	-20°C to +60°C
Fork Type	Swivel Caster With Total Brake
Stainless	N/A
Electrical Conductivity	N/A
Anti-Static	N/A
Weight	0.24kgs
Standard	ISO22881

Advantages at a glance

Rolling Resistance	● ● ● ● ○
Operating Noise	● ● ● ● ○
Floor Surface Preservation	● ● ● ● ●

Dimensions

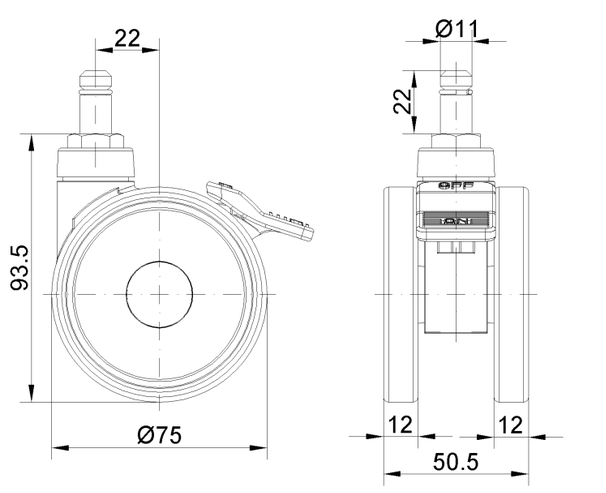

Mounting

* For any deviation between metric and imperial spec, please refer to the metric spec.

© Copyright 2026 DershengInternational www.dersheng.com