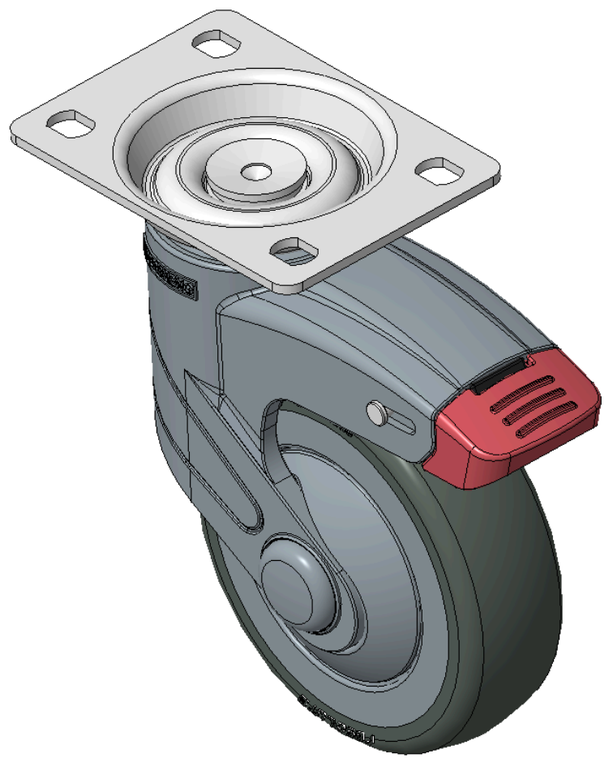

Picture may differ from original product



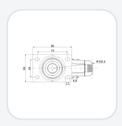

1155 STAT Series Caster Series (All Plastic)

Resolute (blue gray) Wheel Diameter × Wheel Width 100 x 31mm

KS-11550400454013 Copy model no.

Wheel Diameter	Load Capacity (Dynamic)	Overall Height	Wheel Bearing
100mm	90kgs	139mm	Wheel With Plain Bearing

- Short Total Brake Casters, 75×45mm perforated Top Plate
- Blue-gray polyamide legs, Zine-Plated Top Plate, Mounting Type - Top Plate device
- High-Quality Impact-Resistant Polypropylene Wheel Center, High-Quality Reinforced Polypropylene Rubber (TPR) Wheel Tread
- Dark gray, Bearing—Ball Bearings.
- Wheel tread: Thermoplastic rubber elastomer (TPR)
- Wheel Center: Made of high-quality impact-resistant polypropylene

Product descriptions are for reference only. The actual product shall prevail.

3D Drawing Request

3D drawings are for members only. Please log in to download.

Product Data Sheet

Metric | Imperial

Wheel Diameter	100mm	Wheel Width	31mm
Wheel Bearing	Wheel With Plain Bearing	Plate Size	96 x 69mm
Bolt Hole Spacing	75×45mm	Plate Hole	11 x 8.6mm
Offset	36mm	Swivel Interference	201mm
Overall Height	139mm	Swivel Radius	100.5mm
Hardness Of Tread	82±5° Shore A	Load Capacity (Dynamic)	90kgs
Load Capacity (Static)	135kgs	Temperature	-20°C to +60°C
Fork Type	Swivel Caster With Total Brake	Stainless	N/A
Electrical Conductivity	N/A	Anti-Static	N/A
Weight	0.64kgs	Standard	ISO22881

* For any deviation between metric and imperial spec, please refer to the metric spec.

Performance

Rolling Smoothness
Max. 5 points Score: 4

Quiet Operation
Max. 5 points Score: 4

Floor Surface Preservation
Max. 5 points Score: 5

Downloads

3D **1155-CN-KS2026111621-d261116182528.rar**
3D drawings are for members only. Please log in to download.

© 2026 DERSHENG CO., LTD. All rights reserved.