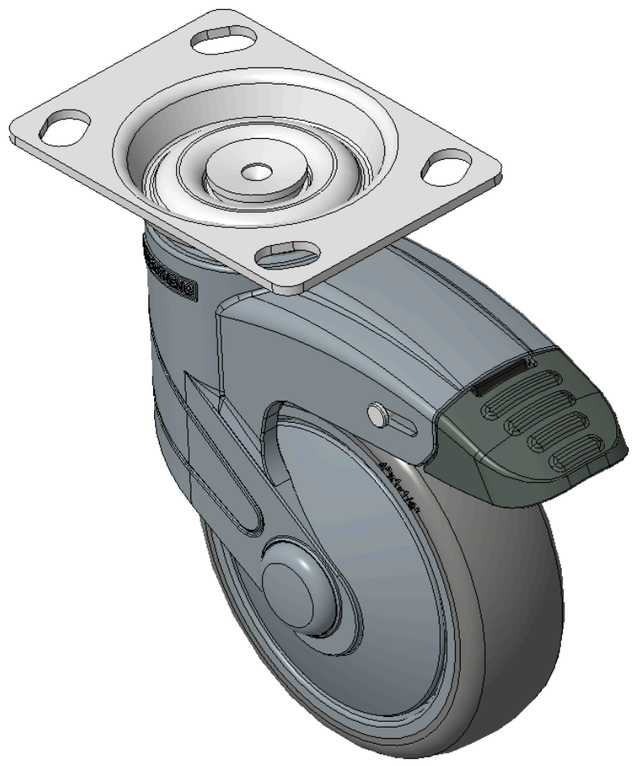

Picture may differ from original product



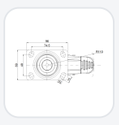

1155 STAT Series Caster Series (All Plastic)

Classic PPR Wheel (Pearlescent Dark Gray) Wheel Diameter×Wheel Width 100×31mm

KS-11550402264323 Copy model no.

Wheel Diameter	Load Capacity (Dynamic)	Overall Height	Wheel Bearing
100mm	80kgs	141.5mm	Wheels With Ball Bearings

- Extra-long Total Brake Casters, 74.5×49mm angled hole Top Plate
- Blue-gray polyamide legs, Zine-Plated Top Plate surface, Mounting Type - Top Plate device
- High-Quality Impact-Resistant Polypropylene Wheel Center, High-Quality Reinforced Polypropylene Rubber (TPR) Wheel Tread
- Pearl dark gray, Bearing—Ball Bearings.
- Wheel tread: Thermoplastic rubber elastomer (TPR)
- Wheel Center: Made of high-quality impact-resistant polypropylene

Product descriptions are for reference only. The actual product shall prevail.

3D Drawing Request

3D drawings are for members only. Please log in to download.

Product Data Sheet

Metric | Imperial

Wheel Diameter	100mm	Wheel Width	31mm
Wheel Bearing	Wheels With Ball Bearings	Plate Size	96 x 69mm
Bolt Hole Spacing	74.5 x 49mm	Plate Hole	15 x 10mm
Offset	36mm	Swivel Interference	220mm
Overall Height	141.5mm	Swivel Radius	110mm
Hardness Of Tread	82±5° Shore A	Load Capacity (Dynamic)	80kgs
Load Capacity (Static)	135kgs	Temperature	-20°C to +60°C
Fork Type	Swivel Caster With Total Brake	Stainless	N/A
Electrical Conductivity	N/A	Anti-Static	N/A
Weight	0.63kgs	Standard	ISO22881

* For any deviation between metric and imperial spec, please refer to the metric spec.

Performance

Rolling Smoothness
Max. 5 points Score: 4

Quiet Operation
Max. 5 points Score: 4

Floor Surface Preservation
Max. 5 points Score: 5

Downloads

3D **1155-CN-KS2026111307-d261113143951.rar**
3D drawings are for members only. Please log in to download. ›

Related Products

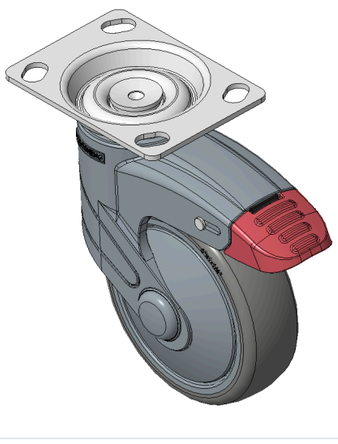

1155 STAT Series Caster Series (All Plastic)

Classic PPR Wheel (Pearlescent Dark Gray) Wheel Diameter×Whe…

KS-11550402264053

wheel diameter	dynamic load	overall height
100 mm	80 kg	141.5 mm

View specs →

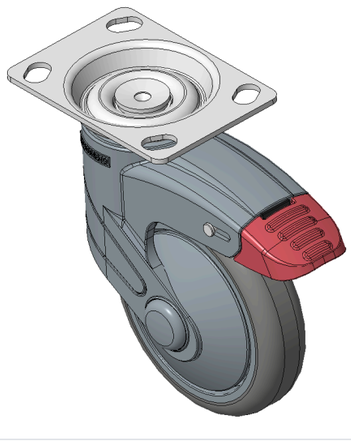

1155 STAT Series Caster Series (All Plastic)

Classic PPR Wheel (Pearlescent Dark Gray) Wheel Diameter×Whe…

KS-11550402264063

wheel diameter	dynamic load	overall height
100 mm	80 kg	141.5 mm

View specs →

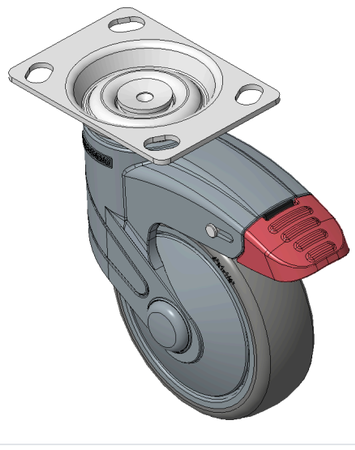

1155 STAT Series Caster Series (All Plastic)

Classic PPR Wheel (Pearlescent Dark Gray) Wheel Diameter×Whe…

KS-11550402264313

wheel diameter	dynamic load	overall height
100 mm	80 kg	141.5 mm

View specs →