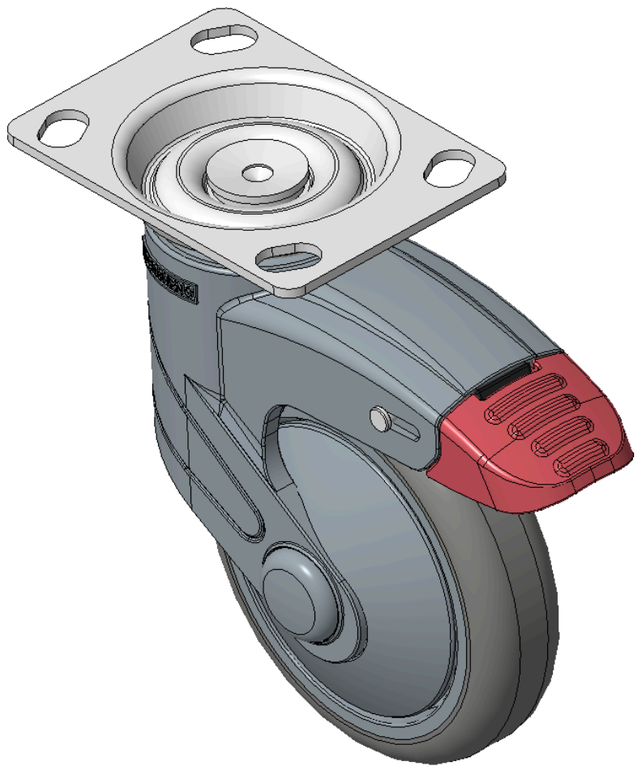

Picture may differ from original product



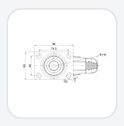

1155 STAT Series Caster Series (All Plastic)

Classic PPR Wheel (Pearlescent Dark Gray) Wheel Diameter×Wheel Width 100×31mm

KS-11550402264063 Copy model no.

Wheel Diameter	Load Capacity (Dynamic)	Overall Height	Wheel Bearing
100mm	**80kgs**	**141.5mm**	**Wheels With Ball Bearings**

- Extra-long Total Brake Casters, 74.5×49mm angled hole Top Plate
- Blue-gray polyamide legs, Zine-Plated Top Plate surface, Mounting Type - Top Plate device
- High-Quality Impact-Resistant Polypropylene Wheel Center, High-Quality Reinforced Polypropylene Rubber (TPR) Wheel Tread
- Pearl dark gray, Bearing—Ball Bearings.
- Wheel tread: Thermoplastic rubber elastomer (TPR)
- Wheel Center: Made of high-quality impact-resistant polypropylene

Product descriptions are for reference only. The actual product shall prevail.

Product Data Sheet | 3D Drawing Request

3D drawings are for members only. Please log in to download.

Product Data Sheet

Metric | Imperial

Wheel Diameter	**100mm**	Wheel Width	**24mm**
Wheel Bearing	**Wheels With Ball Bearings**	Plate Size	**96 x 69mm**
Bolt Hole Spacing	**74.5 x 49mm**	Plate Hole	**15 x 10mm**
Offset	**36mm**	Swivel Interference	**220mm**
Overall Height	**141.5mm**	Swivel Radius	**110mm**
Hardness Of Tread	**82±5° Shore A**	Load Capacity (Dynamic)	**80kgs**
Load Capacity (Static)	**135kgs**	Temperature	**-20°C to +60°C**
Fork Type	**Swivel Caster With Total Brake**	Stainless	**N/A**
Electrical Conductivity	**N/A**	Anti-Static	**N/A**
Weight	**0.63kgs**	Standard	**ISO22881**

* For any deviation between metric and imperial spec, please refer to the metric spec.

Performance

Rolling Smoothness
Max. 5 points Score: 4

Quiet Operation
Max. 5 points Score: 4

Floor Surface Preservation
Max. 5 points Score: 5

Downloads

PDF **1155-EN-KS2026111305.pdf**
Product Data Sheet

3D **1155-CN-KS2026111305-d261113140620.rar**
3D drawings are for members only. Please log in to download.

Related Products

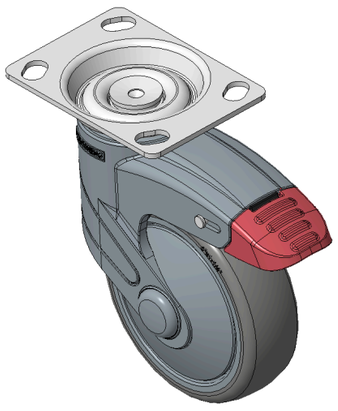

1155 STAT Series Caster Series (All Plastic)

Classic PPR Wheel (Pearlescent Dark Gray) Wheel Diameter×Whe…

KS-11550402264053

wheel diameter	dynamic load	overall height
100 mm	80 kg	141.5 mm

View specs →