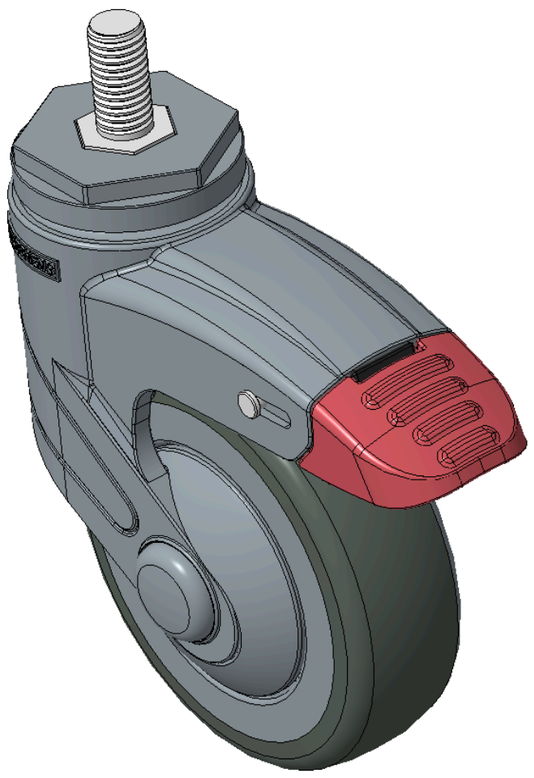

Picture may differ from original product





1155 STAT Series Caster Series (All Plastic)

PPR (Blue-Grey) Wheel Diameter × Wheel Width 100 x 31mm

KS-11550400266413 Copy model no.

Wheel Diameter	Load Capacity (Dynamic)	Overall Height	Wheel Bearing
100mm	90kgs	139mm	Wheels With Ball Bearings

- Long Total Brake type, toothed locking with blue-gray polyamide legs—M12x25
- Zinc-plated Threaded Stem surface, Mounting Type - Threaded Stem device
- High-Quality Impact-Resistant Polypropylene Wheel Center, High-Quality Reinforced Polypropylene Rubber (TPR) rim
- Dark gray, Bearing—Plain Bearing, with Dust Cap.
- Wheel tread: Thermoplastic rubber elastomer (TPR)
- Wheel Center: Made of high-quality impact-resistant polypropylene

Product descriptions are for reference only. The actual product shall prevail.

Product Data Sheet (Metric) | 3D Drawing Request

3D drawings are for members only. Please log in to download.

Product Data Sheet

Metric | Imperial

Wheel Diameter	100mm	Wheel Width	31mm
Wheel Bearing	Wheels With Ball Bearings	Threaded Stem	M12×P1.75
Threaded Length	25mm	Offset	36mm
Swivel Interference	220mm	Overall Height	139mm
Swivel Radius	110mm	Hardness Of Tread	82±5° Shore A
Load Capacity (Dynamic)	90kgs	Load Capacity (Static)	135kgs
Temperature	-20°C to +60°C	Fork Type	Swivel Caster
Stainless	N/A	Electrical Conductivity	N/A
Anti-Static	N/A	Weight	0.49kgs
Standard	ISO22881		

* For any deviation between metric and imperial spec, please refer to the metric spec.

Performance

Rolling Smoothness
Max. 5 points Score: 4

Quiet Operation
Max. 5 points Score: 4

Floor Surface Preservation
Max. 5 points Score: 5

Downloads

PDF **1155-EN-KS2026110708.pdf**
Product Data Sheet (Metric)

3D **1155-CN-KS2026110708-d261107095855.rar**
3D drawings are for members only. Please log in to download.

Related Products

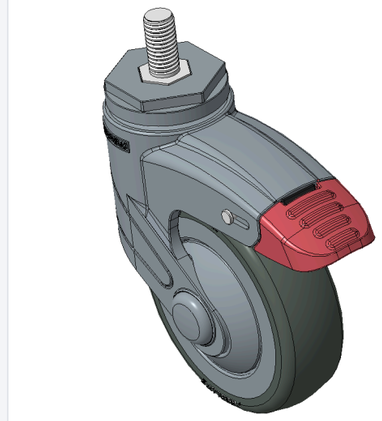

1155 STAT Series Caster Series (All Plastic)
PPR (Blue-Grey) Wheel Diameter × Wheel Width 100 x 31mm
KS-11550400266053

wheel diameter	dynamic load	overall height
100 mm	90 kg	139 mm

View specs →

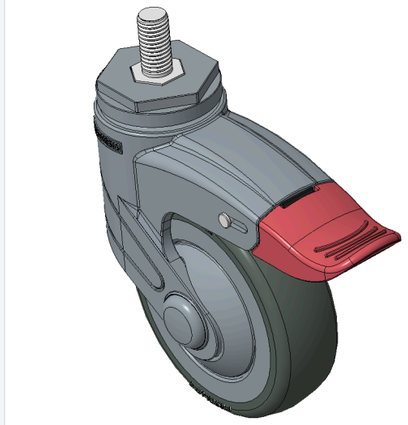

1155 STAT Series Caster Series (All Plastic)
PPR (Blue-Grey) Wheel Diameter × Wheel Width 100 x 31mm
KS-11550400266053H

wheel diameter	dynamic load	overall height
100 mm	90 kg	139 mm

View specs →

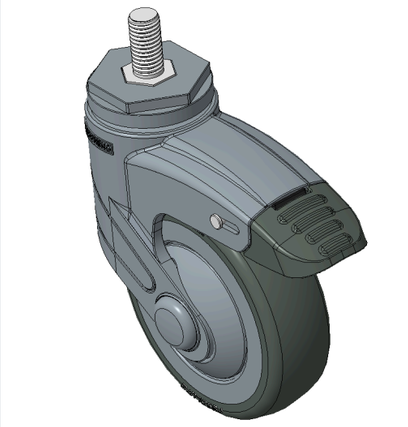

1155 STAT Series Caster Series (All Plastic)
PPR (Blue-Grey) Wheel Diameter × Wheel Width 100 x 31mm
KS-11550400266093

wheel diameter	dynamic load	overall height
100 mm	90 kg	139 mm

View specs →

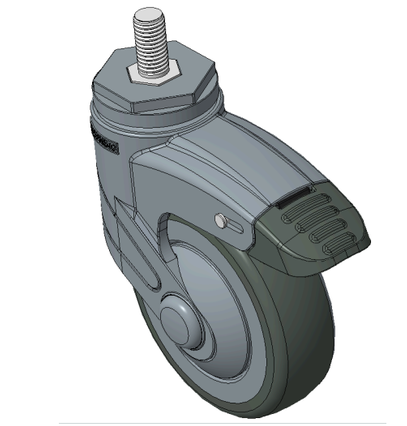

1155 STAT Series Caster Series (All Plastic)
PPR (Blue-Grey) Wheel Diameter × Wheel Width 100 x 31mm
KS-11550400266433

wheel diameter	dynamic load	overall height
100 mm	90 kg	139 mm

View specs →