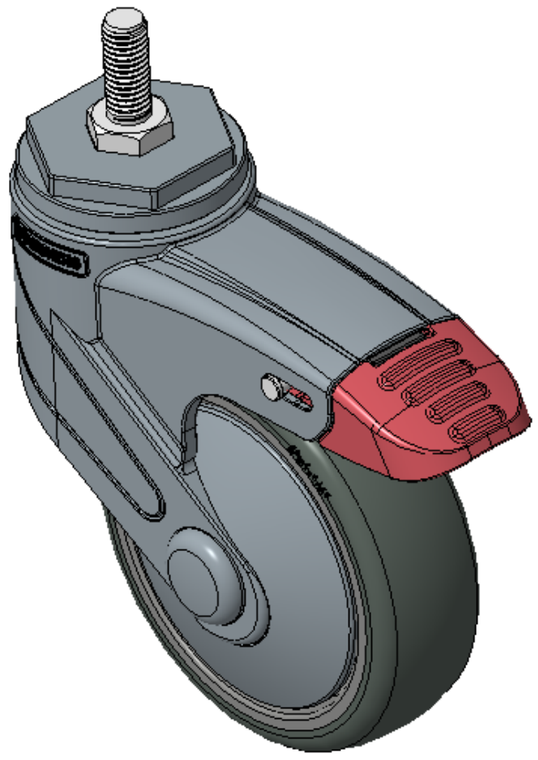

Picture may differ from original product


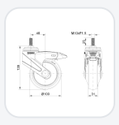
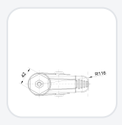

1155-2 Light Plastic-2 Series

PPR (Pearlescent dark gray) Wheel Diameter × Wheel Width 100 x 31mm

KS-11550403266173 Copy model no.

Wheel Diameter	Load Capacity (Dynamic)	Overall Height	Wheel Bearing
100mm	50kgs	139mm	Wheels With Ball Bearings

- Total-lock caster，Threaded stem M10x25
- Blue-gray bracket made of reinforced polyamide，Threaded stem mounting
- Rust-resistant，Corrosion-resistant，Attractive appearance，Economical，Smooth swiveling
- Impact-resistant polypropylene wheel core，Thermoplastic elastomer（TPR）Tread
- Pearl dark gray，Wheel—Sleeve type，With dust cover
- Tread：Thermoplastic rubber elastomer(TPR)
- Wheel core：Made of high-quality impact-resistant polypropylene

Product descriptions are for reference only. The actual product shall prevail.

Product Data Sheet (Metric) | 3D Drawing Request

3D drawings are for members only. Please log in to download.

Product Data Sheet

Metric | Imperial

Wheel Diameter	100mm	Wheel Width	31mm
Wheel Bearing	Wheels With Ball Bearings	Threaded Stem	M10
Threaded Length	25mm	Offset	46mm
Swivel Interference	232mm	Overall Height	139mm
Swivel Radius	116mm	Hardness Of Tread	82±5° Shore A
Load Capacity (Dynamic)	50kgs	Load Capacity (Static)	75kgs
Temperature	-20°C to +60°C	Fork Type	Swivel Caster With Total Brake
Stainless	N/A	Electrical Conductivity	N/A
Anti-Static	N/A	Weight	0.40kgs
Standard	ISO22881		

* For any deviation between metric and imperial spec, please refer to the metric spec.

Performance

Rolling Smoothness
Max. 5 points Score: 4

Quiet Operation
Max. 5 points Score: 4

Floor Surface Preservation
Max. 5 points Score: 5

Downloads

PDF **KS-115504032661733.pdf**
Product Data Sheet (Metric)

3D **KS-11550403266173.zip**
3D drawings are for members only. Please log in to download.

Related Products

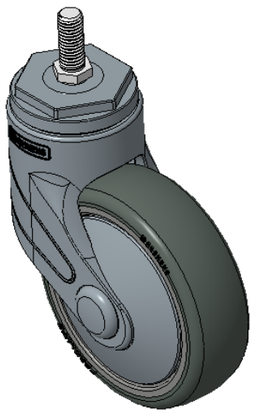

1155-2 Light Plastic-2 Series
PPR (Pearlescent dark gray) Wheel Diameter × Wheel Width 100 x…
KS-11550403265043

wheel diameter	dynamic load	overall height
100 mm	50 kg	139 mm

View specs →

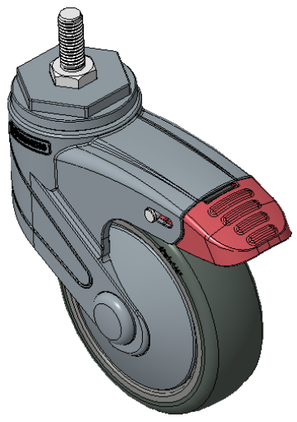

1155-2 Light Plastic-2 Series
PPR (Pearlescent dark gray) Wheel Diameter × Wheel Width 100 x…
KS-11550403266043

wheel diameter	dynamic load	overall height
100 mm	50 kg	139 mm

View specs →

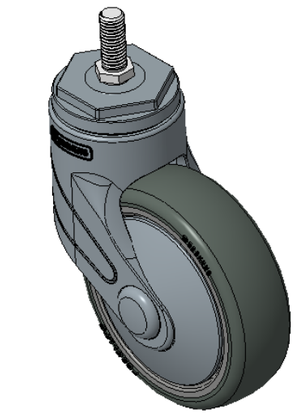

1155-2 Light Plastic-2 Series
PPR (Pearlescent dark gray) Wheel Diameter × Wheel Width 100 x…
KS-11550403265173

wheel diameter	dynamic load	overall height
100 mm	50 kg	139 mm

View specs →

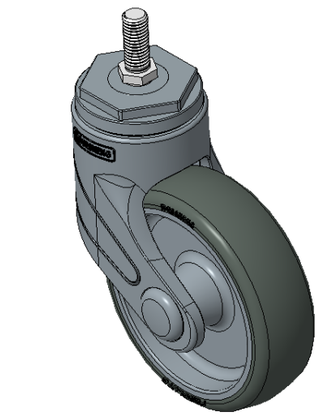

1155-2 Light Plastic-2 Series
PPR (Pearlescent dark gray) Wheel Diameter × Wheel Width 100 x…
KS-11550403265183

wheel diameter	dynamic load	overall height
100 mm	50 kg	139 mm

View specs →