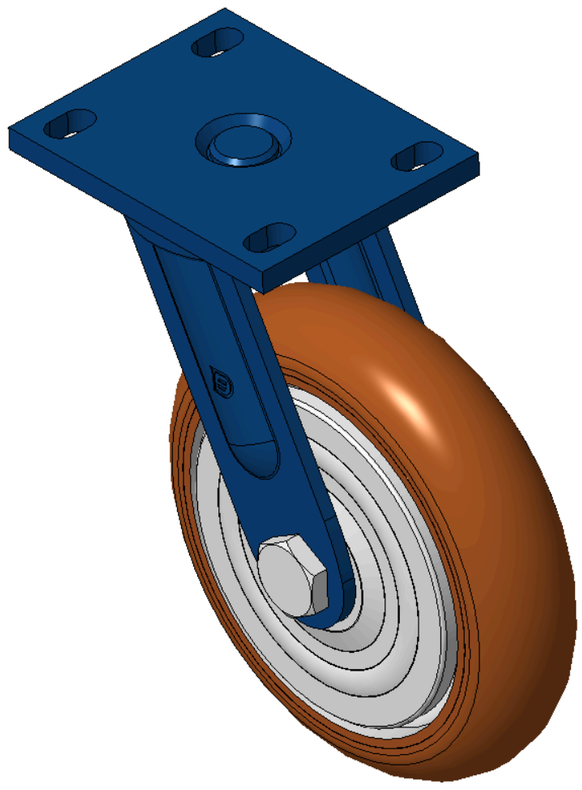

Picture may differ from original product



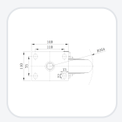

1152 Anti-Friction Caster Series

EQPU (brown round) Wheel Diameter x Wheel Width 200 x 50mm

KS-11520800552061 Copy model no.

Wheel Diameter	Load Capacity (Dynamic)	Overall Height	Wheel Bearing
200mm	750kgs	248mm	Wheels With Ball Bearings

- Swivel caster，Welded steel plate bracket，Blue-painted finish
- Top plate mounting，Hole spacing 110x75
- Cast iron wheel core，High-quality polyurethane tread，Brown
- Wheel bearing—Precision ball bearing
- Tread：High-quality polyurethane tread
- Wheel core：Iron/cast iron core

Product descriptions are for reference only. The actual product shall prevail.

Product Data Sheet (Metric) | 3D Drawing Request

3D drawings are for members only. Please log in to download.

Product Data Sheet

Metric | Imperial

Wheel Diameter	200mm	Wheel Width	50mm
Wheel Bearing	Wheels With Ball Bearings	Plate Size	140 x 110mm
Bolt Hole Spacing	110x75mm	Plate Hole	22 x 13mm
Offset	62mm	Swivel Interference	328mm
Overall Height	248mm	Swivel Radius	164mm
Hardness Of Tread	92±5° Shore A	Load Capacity (Dynamic)	750kgs
Load Capacity (Static)	1125kgs	Temperature	-20°C to +70°C
Fork Type	Swivel Caster	Stainless	N/A
Electrical Conductivity	N/A	Anti-Static	N/A
Weight	6.73kgs	Standard	ISO22883

* For any deviation between metric and imperial spec, please refer to the metric spec.

Performance

Rolling Smoothness
Max. 5 points Score: 5

Quiet Operation
Max. 5 points Score: 5

Floor Surface Preservation
Max. 5 points Score: 5

Downloads

PDF **KS-11520800552061 3.pdf**
Product Data Sheet (Metric)

3D **KS-11520800552061.zip**
3D drawings are for members only. Please log in to download.

Related Products

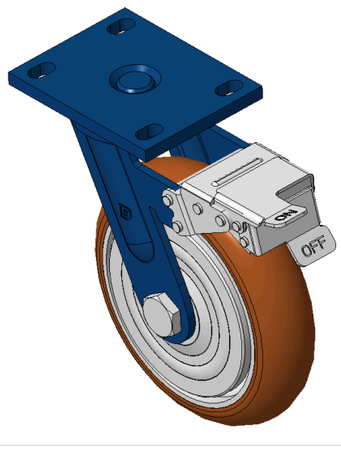

1152 Anti-Friction Caster Series

EQPU (brown round) Wheel Diameter x Wheel Width 200 x…

KS-11520800554161

wheel diameter	dynamic load	overall height
200 mm	750 kg	248 mm

View specs →

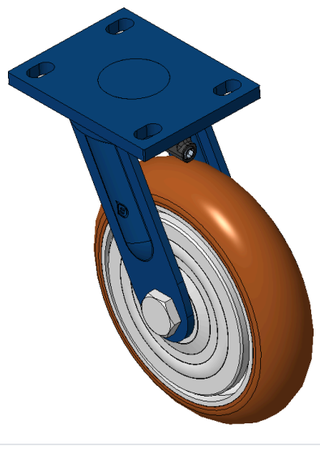

1152 Self-Align Casters Series

EQPU (brown round) Wheel Diameter x Wheel Width 200 x…

KS-11520800552741

wheel diameter	dynamic load	overall height
200 mm	750 kg	248 mm

View specs →

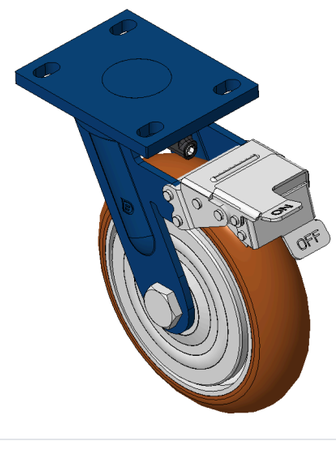

1152 Self-Align Casters Series

EQPU (brown round) Wheel Diameter x Wheel Width 200 x…

KS-11520800554741

wheel diameter	dynamic load	overall height
200 mm	750 kg	248 mm

View specs →