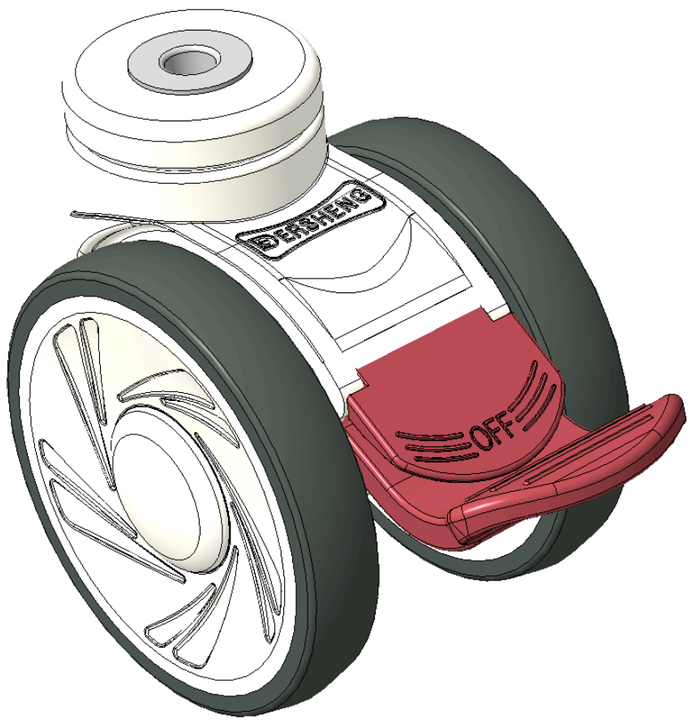

Picture may differ from original product



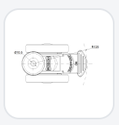

1146 46 Ascendant Series Caster Series(All Plastic)

Double-Ball Full-Effect Wheel (White-Dark Gray) Wheel Diameter × Wheel Width 100 × 18mm

KS-11460400269413 Copy model no.

Wheel Diameter	Load Capacity (Dynamic)	Overall Height	Wheel Bearing
100mm	90kgs	120mm	Wheels With Ball Bearings

- Long Total Brake Casters, Single Bolthole polyamide legs — hollow Ø10.5
- White legs are made of polyamide reinforcement.
- Rust-proof, Corrosion resistant, Attractive appearance, Economical, and allows for Smooth rotation.
- High-Quality Impact-Resistant Polypropylene Wheel Center, High-Quality Reinforced Polypropylene Rubber (TPR) Wheel Tread.
- Dark gray, Bearing — Ball Bearings.
- Wheel tread: Thermoplastic rubber elastomer (TPR)
- Wheel Center: Made of high-quality impact-resistant polypropylene

Product descriptions are for reference only. The actual product shall prevail.

Product Data Sheet (Metric) | 3D Drawing Request

3D drawings are for members only. Please log in to download.

Product Data Sheet

Metric | Imperial

Wheel Diameter	100mm	Wheel Width	85mm
Wheel Bearing	Wheels With Ball Bearings	Single Bolt HoleCentre Hole	10.5mm
Offset	32mm	Swivel Interference	250mm
Overall Height	120mm	Swivel Radius	125mm
Hardness Of Tread	82±5° Shore A	Load Capacity (Dynamic)	90kgs
Load Capacity (Static)	135kgs	Temperature	-20°C to +60°C
Fork Type	Swivel Caster	Stainless	N/A
Electrical Conductivity	N/A	Anti-Static	N/A
Weight	0.23kgs	Standard	ISO22881

* For any deviation between metric and imperial spec, please refer to the metric spec.

Performance

Rolling Smoothness
Max. 5 points Score: 4

Quiet Operation
Max. 5 points Score: 4

Floor Surface Preservation
Max. 5 points Score: 5

Downloads

PDF **1146-EN-KS2026102911.pdf**
Product Data Sheet (Metric)

3D **KS-11460400269413.rar**
3D drawings are for members only. Please log in to download.

Related Products

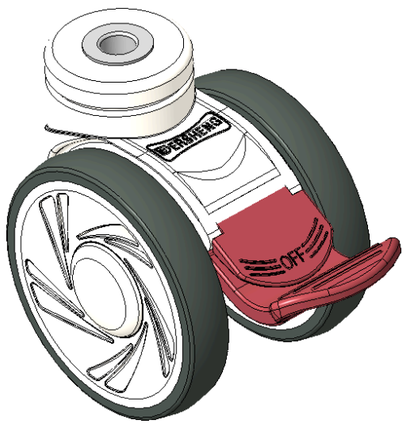

1146 46 Ascendant Series Caster Series(All Pla
Double-Ball Full-Effect Wheel (White-Dark Gray) Wheel Diamete…
KS-11460400459423

wheel diameter	dynamic load	overall height
100 mm	100 kg	120 mm

View specs →

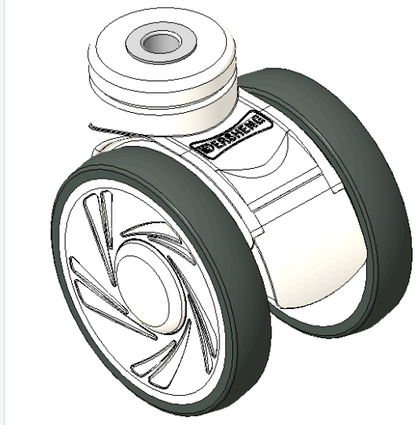

1146 46 Ascendant Series Caster Series(All Pla
Double-Ball Full-Effect Wheel (White-Dark Gray) Wheel Diamete…
KS-11460400459223

wheel diameter	dynamic load	overall height
100 mm	100 kg	120 mm

View specs →

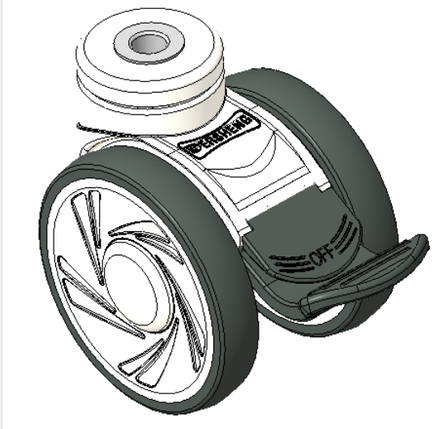

1146 46 Ascendant Series Caster Series(All Pla
Double-Ball Full-Effect Wheel (White-Dark Gray) Wheel Diamete…
KS-11460400459423B

wheel diameter	dynamic load	overall height
100 mm	100 kg	120 mm

View specs →

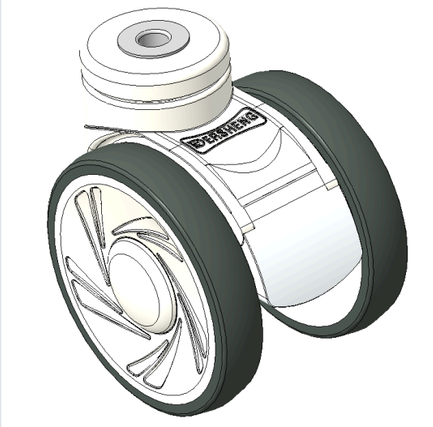

1146 46 Ascendant Series Caster Series(All Pla
Double-Ball Full-Effect Wheel (White-Dark Gray) Wheel Diamete…
KS-11460400269213

wheel diameter	dynamic load	overall height
100 mm	90 kg	120 mm

View specs →