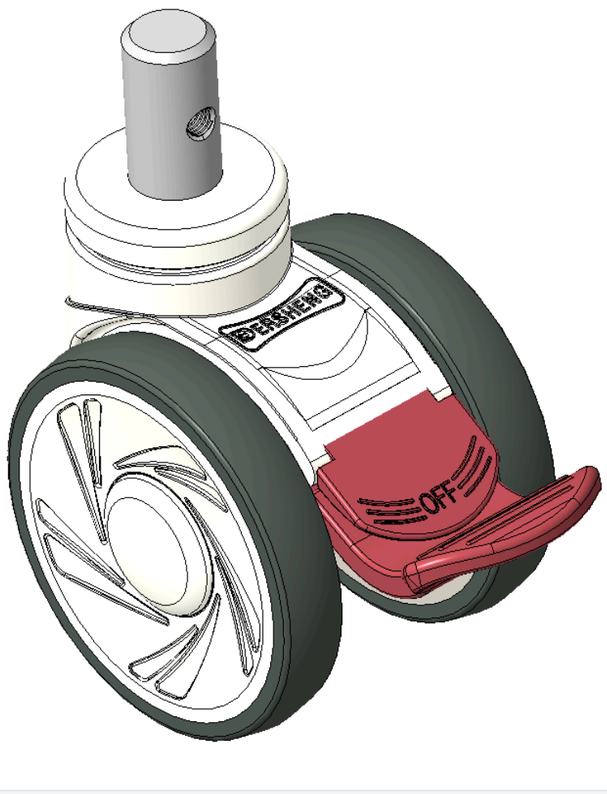


Picture may differ from original product



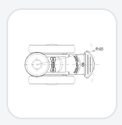

1146 46 Ascendant Series Caster Series(All Plastic)

# Double-Ball Full-Effect Wheel (White-Dark Gray) Wheel Diameter × Wheel Width 100 × 18mm

KS-11460400268033 Copy model no.

| Wheel Diameter | Load Capacity (Dynamic) | Overall Height | Wheel Bearing |
|---|---|---|---|
| 100mm | 100kgs | 120mm | Wheels With Ball Bearings |

- Long Total Brake Casters, mortise-and-tenon Stamping Fork—Ø22x40L
- White legs made of polypropylene reinforced material
- Rust-proof, Corrosion resistant, Attractive appearance, Economical, and allows for Smooth rotation
- High-Quality Impact-Resistant Polypropylene Wheel Center, High-Quality Reinforced Polypropylene Rubber (TPR) Wheel Tread
- Dark gray, Bearing—Ball Bearings
- Wheel tread: Thermoplastic rubber elastomer (TPR)
- Wheel Center: Made of high-quality impact-resistant polypropylene

Product descriptions are for reference only. The actual product shall prevail.

Product Data Sheet (Metric) | 3D Drawing Request

3D drawings are for members only. Please log in to download.

## Product Data Sheet

Metric | Imperial

| | | | |
|---|---|---|---|
| Wheel Diameter | **100mm** | Wheel Width | **85mm** |
| Wheel Bearing | **Wheels With Ball Bearings** | Stem Diameter | **22mm** |
| Stem Length | **40mm** | Offset | **32mm** |
| Swivel Interference | **250mm** | Overall Height | **120mm** |
| Swivel Radius | **125mm** | Hardness Of Tread | **82±5° Shore A** |
| Load Capacity (Dynamic) | **100kgs** | Load Capacity (Static) | **150kgs** |
| Temperature | **-20°C to +60°C** | Fork Type | **Swivel Caster** |
| Stainless | **N/A** | Electrical Conductivity | **N/A** |
| Anti-Static | **N/A** | Weight | **0.80kgs** |
| Standard | **ISO22881** | | |

* For any deviation between metric and imperial spec, please refer to the metric spec.

## Performance

**Rolling Smoothness**
Max. 5 points Score: 4

**Quiet Operation**
Max. 5 points Score: 4

**Floor Surface Preservation**
Max. 5 points Score: 5

## Downloads

PDF **1146-EN-KS2026102820.pdf**
Product Data Sheet (Metric)

3D **KS-11460400268033.rar**
3D drawings are for members only. Please log in to download.

## Related Products

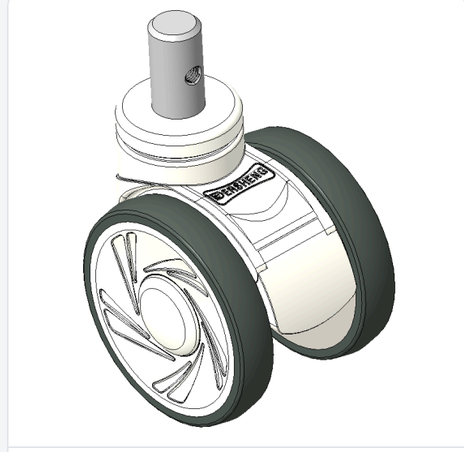


1146 46 Ascendant Series Caster Series(All Pla:

**Double-Ball Full-Effect Wheel (White-Dark Gray) Wheele···**

KS-11460400267033

| wheel diameter | dynamic load | overall height |
|---|---|---|
| 100 mm | 100 kg | 120 mm |

View specs →

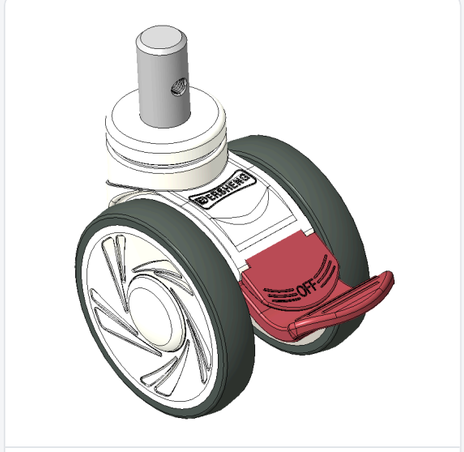


1146 46 Ascendant Series Caster Series(All Pla:

**Double-Ball Full-Effect Wheel (White-Dark Gray) Wheele···**

KS-11460400268033A

| wheel diameter | dynamic load | overall height |
|---|---|---|
| 100 mm | 100 kg | 120 mm |

View specs →

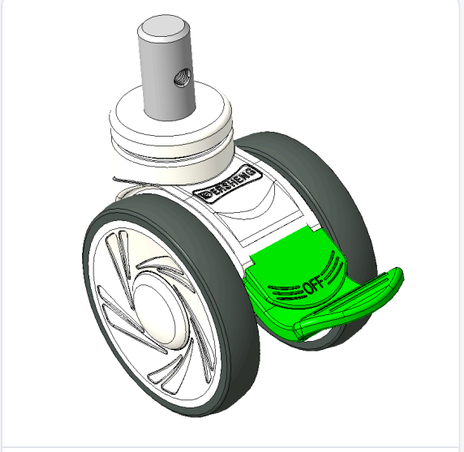


1146 46 Ascendant Series Caster Series(All Pla:

**Double-Ball Full-Effect Wheel (White-Dark Gray) Wheele···**

KS-11460400268223

| wheel diameter | dynamic load | overall height |
|---|---|---|
| 100 mm | 100 kg | 120 mm |

View specs →

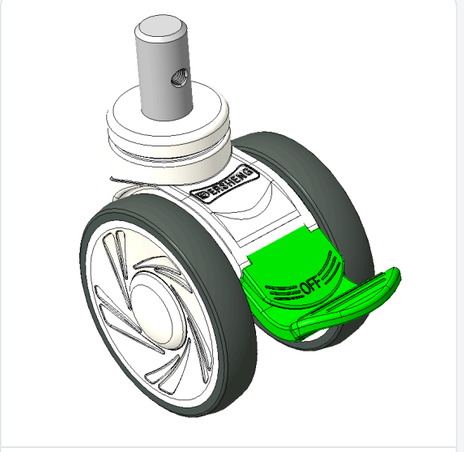


1146 46 Ascendant Series Caster Series(All Pla:

**Double-Ball Full-Effect Wheel (White-Dark Gray) Wheele···**

KS-11460400268263

| wheel diameter | dynamic load | overall height |
|---|---|---|
| 100 mm | 100 kg | 120 mm |

View specs →