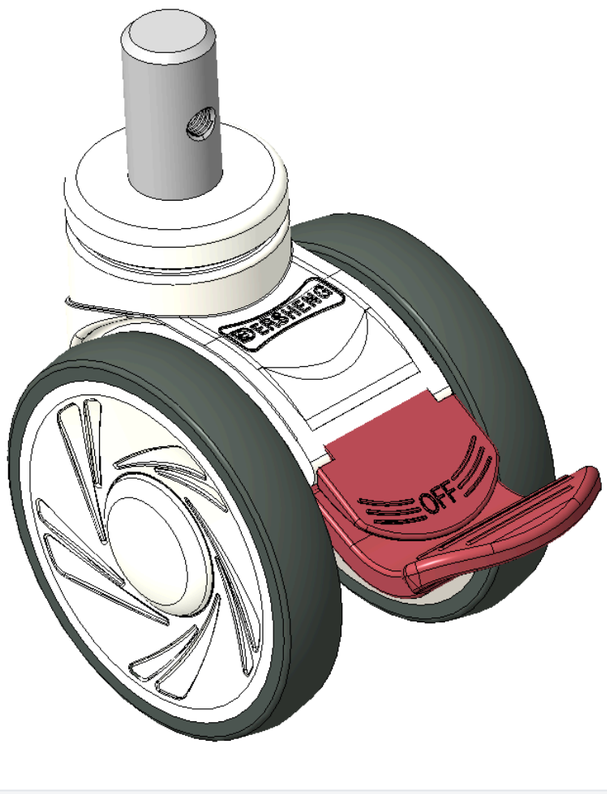

Picture may differ from original product



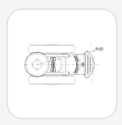

1146 46 Ascendant Series Caster Series(All Plastic)

Double-Ball Full-Effect Wheel (White-Dark Gray) Wheel Diameter × Wheel Width 100 × 18mm

KS-11460400268033 Copy model no.

Wheel Diameter	Load Capacity (Dynamic)	Overall Height	Wheel Bearing
100mm	100kgs	120mm	Wheels With Ball Bearings

- Long Total Brake Casters, mortise-and-tenon Stamping Fork—Ø22x40L
- White legs made of polypropylene reinforced material
- Rust-proof, Corrosion resistant, Attractive appearance, Economical, and allows for Smooth rotation
- High-Quality Impact-Resistant Polypropylene Wheel Center, High-Quality Reinforced Polypropylene Rubber (TPR) Wheel Tread
- Dark gray, Bearing—Ball Bearings
- Wheel tread: Thermoplastic rubber elastomer (TPR)
- Wheel Center: Made of high-quality impact-resistant polypropylene

Product descriptions are for reference only. The actual product shall prevail.

Product Data Sheet (Metric) | 3D Drawing Request

3D drawings are for members only. Please log in to download.

Product Data Sheet

Metric | Imperial

Wheel Diameter	**100mm**	Wheel Width	**85mm**
Wheel Bearing	**Wheels With Ball Bearings**	Stem Diameter	**22mm**
Stem Length	**40mm**	Offset	**32mm**
Swivel Interference	**250mm**	Overall Height	**120mm**
Swivel Radius	**125mm**	Hardness Of Tread	**82±5° Shore A**
Load Capacity (Dynamic)	**100kgs**	Load Capacity (Static)	**150kgs**
Temperature	**-20°C to +60°C**	Fork Type	**Swivel Caster**
Stainless	**N/A**	Electrical Conductivity	**N/A**
Anti-Static	**N/A**	Weight	**0.80kgs**
Standard	**ISO22881**		

* For any deviation between metric and imperial spec, please refer to the metric spec.

Performance

Rolling Smoothness
Max. 5 points Score: 4

Quiet Operation
Max. 5 points Score: 4

Floor Surface Preservation
Max. 5 points Score: 5

Downloads

PDF **1146-EN-KS2026102820.pdf**
Product Data Sheet (Metric)

3D **KS-11460400268033.rar**
3D drawings are for members only. Please log in to download.

Related Products

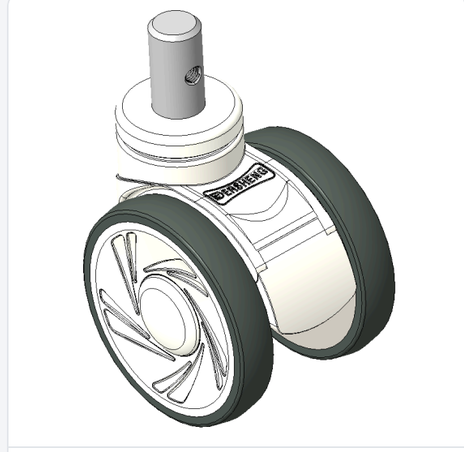

1146 46 Ascendant Series Caster Series(All Pla:

Double-Ball Full-Effect Wheel (White-Dark Gray) Wheele···

KS-11460400267033

wheel diameter	dynamic load	overall height
100 mm	100 kg	120 mm

View specs →

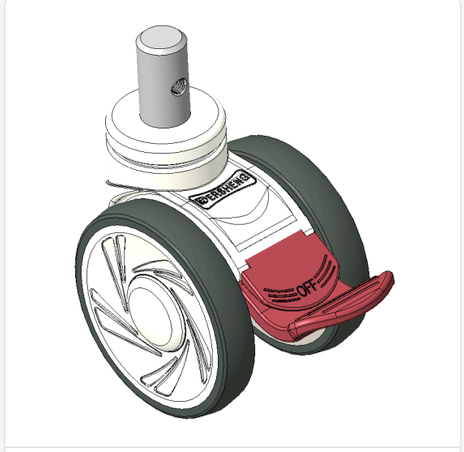

1146 46 Ascendant Series Caster Series(All Pla:

Double-Ball Full-Effect Wheel (White-Dark Gray) Wheele···

KS-11460400268033A

wheel diameter	dynamic load	overall height
100 mm	100 kg	120 mm

View specs →

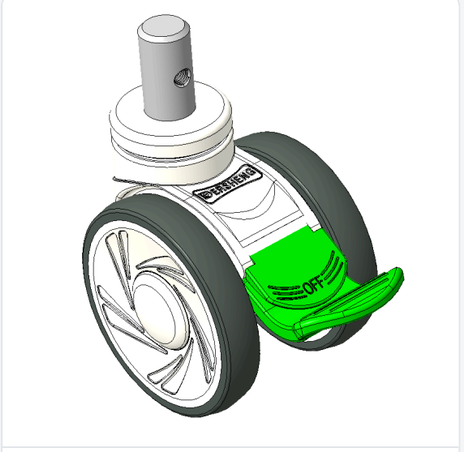

1146 46 Ascendant Series Caster Series(All Pla:

Double-Ball Full-Effect Wheel (White-Dark Gray) Wheele···

KS-11460400268223

wheel diameter	dynamic load	overall height
100 mm	100 kg	120 mm

View specs →

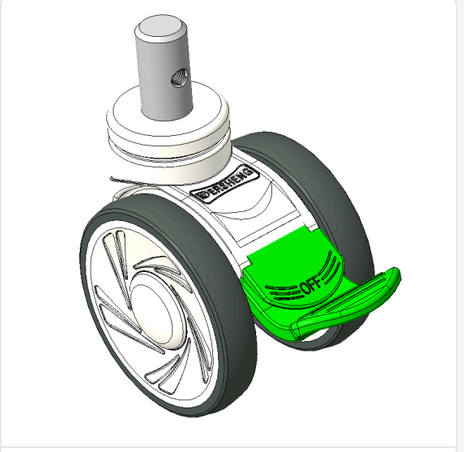

1146 46 Ascendant Series Caster Series(All Pla:

Double-Ball Full-Effect Wheel (White-Dark Gray) Wheele···

KS-11460400268263

wheel diameter	dynamic load	overall height
100 mm	100 kg	120 mm

View specs →