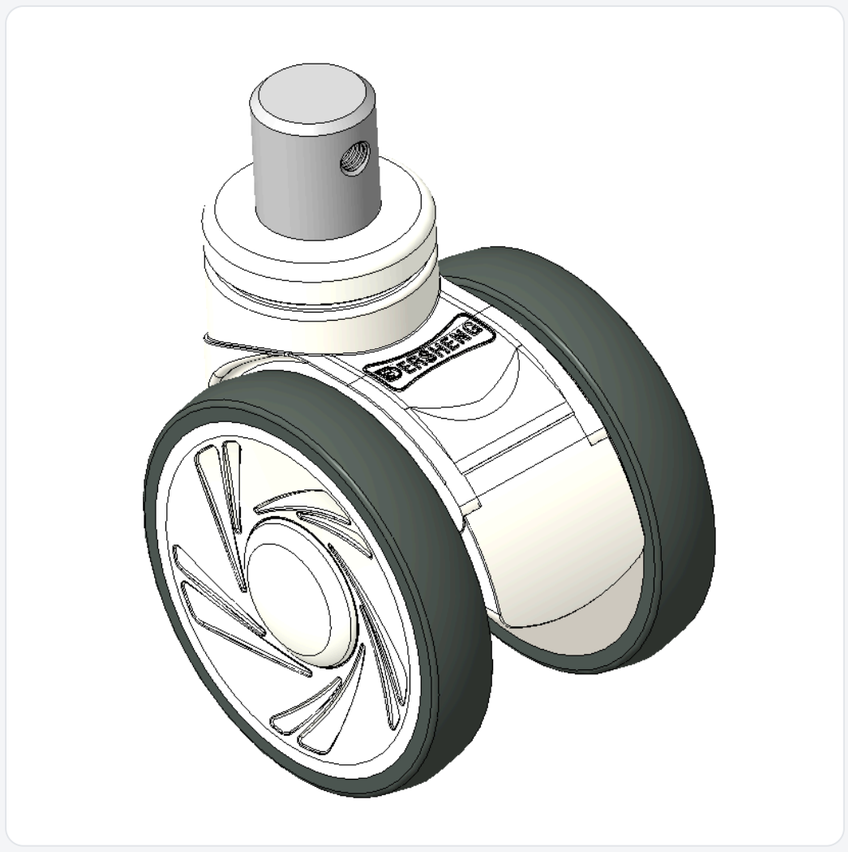

Picture may differ from original product



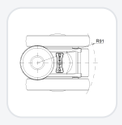

1146 46 Ascendant Series Caster Series(All Plastic)

Double-Ball Full-Effect Wheel (White-Dark Gray) Wheel Diameter × Wheel Width 100 × 18mm

KS-11460400267043 Copy model no.

Wheel Diameter	Load Capacity (Dynamic)	Overall Height	Wheel Bearing
100mm	100kgs	120mm	Wheels With Ball Bearings

- Swivel Casters, mortise-and-tenon Stamping Fork—Ø28x30L
- Window gray legs made of polypropylene reinforced material
- Rust-proof, Corrosion resistant, Attractive appearance, Economical, and Smooth rotation
- High-Quality Impact-Resistant Polypropylene Wheel Center, High-Quality Reinforced Polypropylene Rubber (TPR) Wheel Tread
- Dark gray, Bearing—Ball Bearings
- Wheel tread: Thermoplastic rubber elastomer (TPR)
- Wheel Center: Made of high-quality impact-resistant polypropylene

Product descriptions are for reference only. The actual product shall prevail.

Product Data Sheet (Metric) | 3D Drawing Request

3D drawings are for members only. Please log in to download.

Product Data Sheet

Metric | Imperial

Wheel Diameter	100mm	Wheel Width	85mm
Wheel Bearing	Wheels With Ball Bearings	Stem Diameter	28mm
Stem Length	30mm	Offset	32mm
Swivel Interference	182mm	Overall Height	120mm
Swivel Radius	91mm	Hardness Of Tread	82±5° Shore A
Load Capacity (Dynamic)	100kgs	Load Capacity (Static)	150kgs
Temperature	-20°C to +60°C	Fork Type	Swivel Caster
Stainless	N/A	Electrical Conductivity	N/A
Anti-Static	N/A	Weight	0.80kgs
Standard	ISO22881		

* For any deviation between metric and imperial spec, please refer to the metric spec.

Performance

Rolling Smoothness
Max. 5 points Score: 4

Quiet Operation
Max. 5 points Score: 4

Floor Surface Preservation
Max. 5 points Score: 5

Downloads

PDF **1146-EN-KS2026102815.pdf**
Product Data Sheet (Metric)

3D **KS-11460400267043.rar**
3D drawings are for members only. Please log in to download.

Related Products

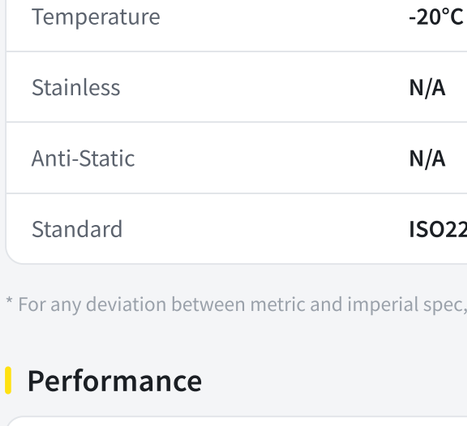

1146 46 Ascendant Series Caster Series(All Pla
Double-Ball Full-Effect Wheel (White-Dark Gray) Wheel Diamete…
KS-11460400458063

wheel diameter	dynamic load	overall height
100 mm	100 kg	120 mm

View specs →

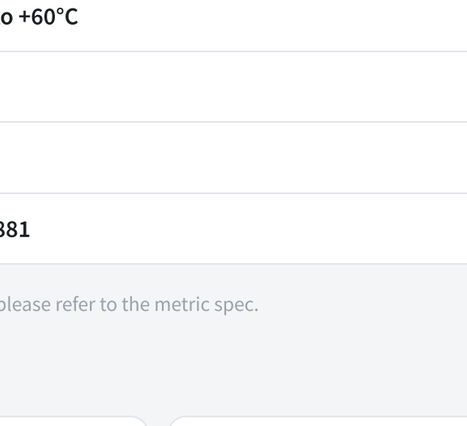

1146 46 Ascendant Series Caster Series(All Pla
Double-Ball Full-Effect Wheel (White-Dark Gray) Wheel Diamete…
KS-11460400457133

wheel diameter	dynamic load	overall height
100 mm	100 kg	120 mm

View specs →

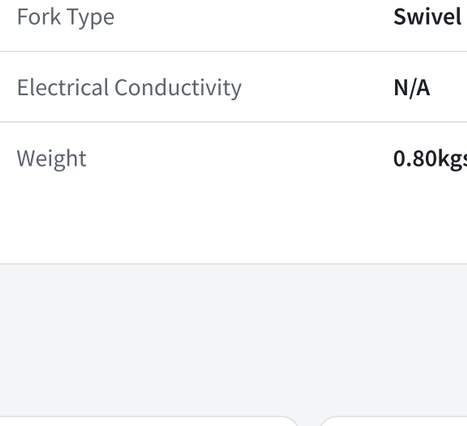

1146 46 Ascendant Series Caster Series(All Pla
Double-Ball Full-Effect Wheel (White-Dark Gray) Wheel Diamete…
KS-11460400457043

wheel diameter	dynamic load	overall height
100 mm	100 kg	120 mm

View specs →

1146 46 Ascendant Series Caster Series(All Pla
Double-Ball Full-Effect Wheel (White-Dark Gray) Wheel Diamete…
KS-11460400458273

wheel diameter	dynamic load	overall height
100 mm	100 kg	120 mm

View specs →