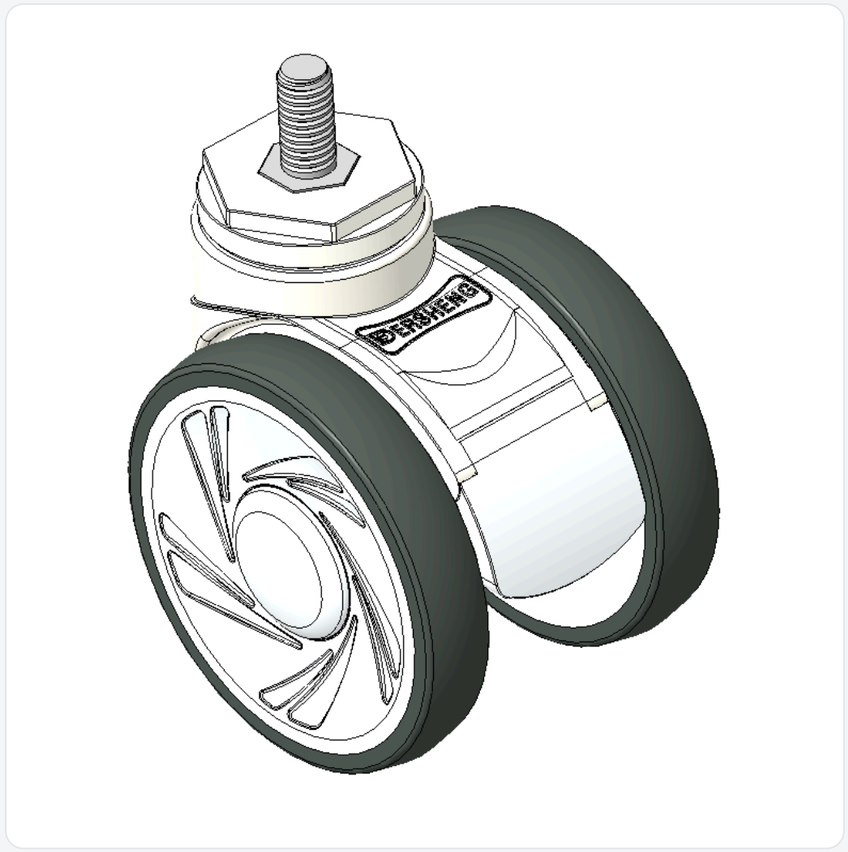

Picture may differ from original product



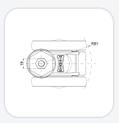

1146 46 Ascendant Series Caster Series(All Plastic)

Double-Ball Full-Effect Wheel (White-Dark Gray) Wheel Diameter × Wheel Width 100 × 18mm

KS-11460400265293 Copy model no.

Wheel Diameter	Load Capacity (Dynamic)	Overall Height	Wheel Bearing
100mm	90kgs	120mm	Wheels With Ball Bearings

- Adjustable Casters, Threaded Stem M12×25
- White Casters made of polypropylene reinforced material
- Rust-proof, Corrosion resistant, Attractive appearance, Economical, and allows for Smooth rotation
- High-Quality Impact-Resistant Polypropylene Wheel Center, High-Quality Reinforced Polypropylene Rubber (TPR) Wheel Tread
- Dark gray, Bearing—Ball Bearings
- Wheel tread: Thermoplastic rubber elastomer (TPR)
- Wheel Center: Made of high-quality impact-resistant polypropylene

Product descriptions are for reference only. The actual product shall prevail.

Product Data Sheet (Metric) | 3D Drawing Request

3D drawings are for members only. Please log in to download.

Product Data Sheet

Metric | Imperial

Wheel Diameter	**100mm**	Wheel Width	**85mm**
Wheel Bearing	**Wheels With Ball Bearings**	Threaded Stem	**M12**
Threaded Length	**25mm**	Overall Height	**120mm**
Hardness Of Tread	**82±5° Shore A**	Load Capacity (Dynamic)	**90kgs**
Load Capacity (Static)	**135 kgs**	Temperature	**-20°C to +60°C**
Fork Type	**Rigid Caster**	Stainless	**N/A**
Electrical Conductivity	**N/A**	Anti-Static	**N/A**
Weight	**0.25kgs**	Standard	**ISO22881**

* For any deviation between metric and imperial spec, please refer to the metric spec.

Performance

Rolling Smoothness
Max. 5 points Score: 4

Quiet Operation
Max. 5 points Score: 4

Floor Surface Preservation
Max. 5 points Score: 5

Downloads

PDF **1146-EN-KS2026102713.pdf**
Product Data Sheet (Metric)

3D **KS-11460400265293.rar**
3D drawings are for members only. Please log in to download.

Related Products

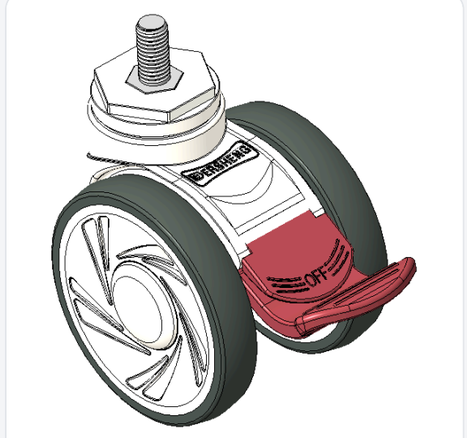

1146 46 Ascendant Series Caster Series(All Pla
Double-Ball Full-Effect Wheel (White-Dark Gray) Wheel Diamete…
KS-11460400456013

wheel diameter	dynamic load	overall height
100 mm	100 kg	120 mm

View specs →

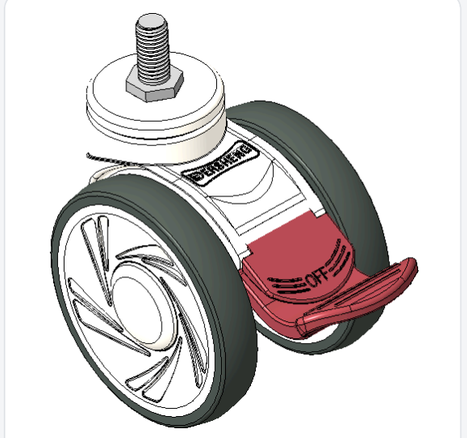

1146 46 Ascendant Series Caster Series(All Pla
Double-Ball Full-Effect Wheel (White-Dark Gray) Wheel Diamete…
KS-11460400456613

wheel diameter	dynamic load	overall height
100 mm	100 kg	120 mm

View specs →

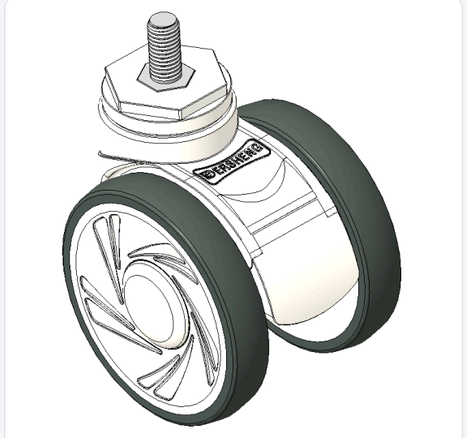

1146 46 Ascendant Series Caster Series(All Pla
Double-Ball Full-Effect Wheel (White-Dark Gray) Wheel Diamete…
KS-11460400455013

wheel diameter	dynamic load	overall height
100 mm	100 kg	120 mm

View specs →

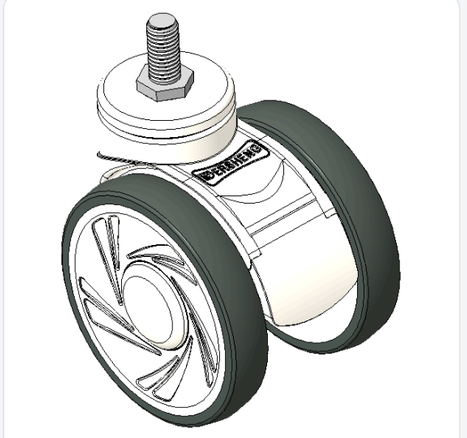

1146 46 Ascendant Series Caster Series(All Pla
Double-Ball Full-Effect Wheel (White-Dark Gray) Wheel Diamete…
KS-11460400455613

wheel diameter	dynamic load	overall height
100 mm	100 kg	120 mm

View specs →