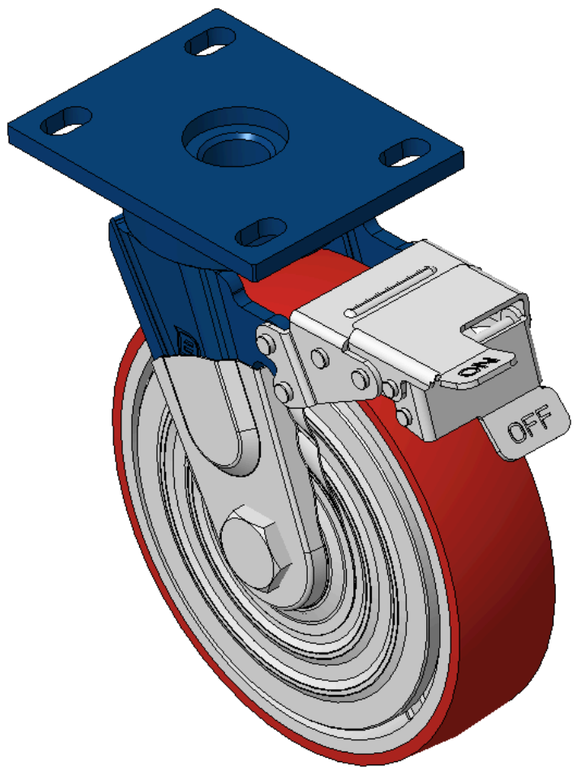

Picture may differ from original product



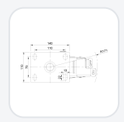

1142 Kingpinless Caster (B Type) Series

PU (red round) Wheel Diameter x Wheel Width 200 x 50mm

KS-11420800334181 Copy model no.

Wheel Diameter	Load Capacity (Dynamic)	Overall Height	Wheel Bearing
200mm	450kgs	248mm	Wheels With Ball Bearings

- With front brake，Caster with locking system，Welded steel plate bracket
- Blue-painted finish，Top plate mounting，Hole spacing 110x75
- Cast iron wheel core，High-quality polyurethane tread，Red
- Wheel bearing—Precision ball bearing，With special anti-wrap wheel covers
- Tread：High-quality polyurethane
- Wheel core：Iron/cast iron core

Product descriptions are for reference only. The actual product shall prevail.

Product Data Sheet (Metric) | 3D Drawing Request

3D drawings are for members only. Please log in to download.

Product Data Sheet

Metric | Imperial

Wheel Diameter	200mm	Wheel Width	50mm
Wheel Bearing	Wheels With Ball Bearings	Plate Size	140 x 110mm
Bolt Hole Spacing	110x75mm	Plate Hole	22 x 13mm
Offset	47mm	Swivel Interference	342mm
Overall Height	248mm	Swivel Radius	171mm
Hardness Of Tread	93±5° Shore A	Load Capacity (Dynamic)	450kgs
Load Capacity (Static)	675kgs	Temperature	-20°C to +70°C
Fork Type	Swivel Caster With Front Brake	Stainless	N/A
Electrical Conductivity	N/A	Anti-Static	N/A
Weight	6.21kgs	Standard	ISO22883

* For any deviation between metric and imperial spec, please refer to the metric spec.

Performance

Rolling Smoothness
Max. 5 points Score: 3

Quiet Operation
Max. 5 points Score: 4

Floor Surface Preservation
Max. 5 points Score: 4

Downloads

PDF **KS-114208003341813.pdf**
Product Data Sheet (Metric)

3D **KS-11420800334181.zip**
3D drawings are for members only. Please log in to download.

Related Products

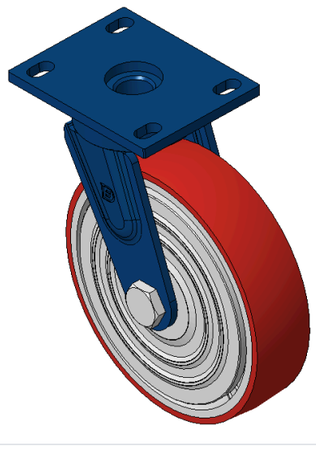

1142 Kingpinless Caster (B Type) Series
PU (red round) Wheel Diameter x Wheel Width 200 x 50mm
KS-11420800332121

wheel diameter	dynamic load	overall height
200 mm	450 kg	248 mm

View specs →

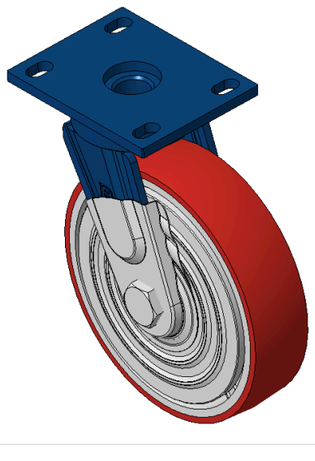

1142 Kingpinless Caster (B Type) Series
PU (red round) Wheel Diameter x Wheel Width 200 x 50mm
KS-11420800332131

wheel diameter	dynamic load	overall height
200 mm	450 kg	248 mm

View specs →

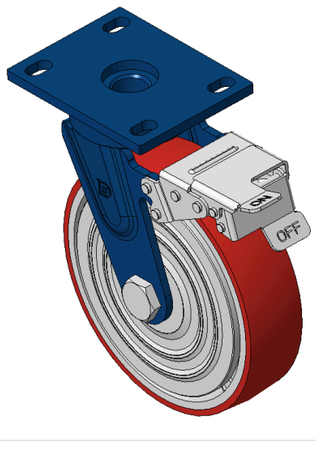

1142 Kingpinless Caster (B Type) Series
PU (red round) Wheel Diameter x Wheel Width 200 x 50mm
KS-11420800334171

wheel diameter	dynamic load	overall height
200 mm	450 kg	248 mm

View specs →