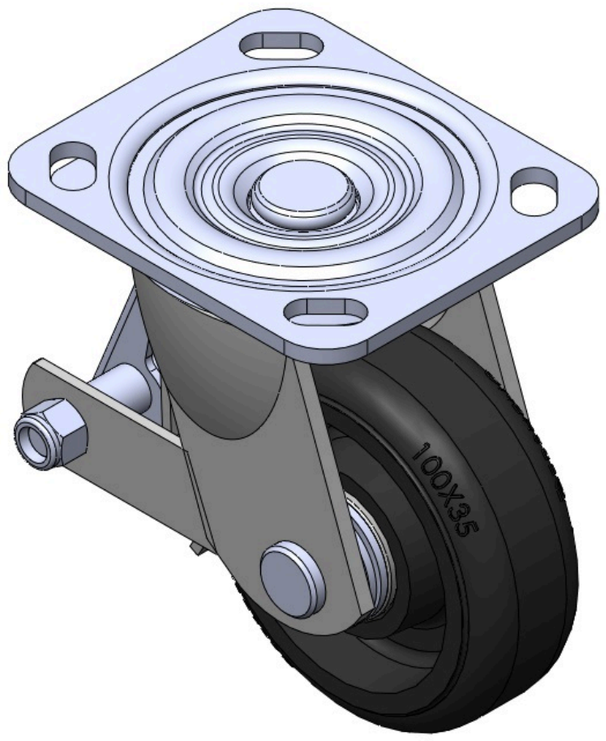

Picture may differ from original product


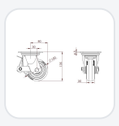
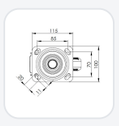

1104-D series

Rubber wheel (black) Wheel diameter × wheel width 100 x 35mm

TW-4110404004008 Copy model no.

Wheel Diameter	Load Capacity (Dynamic)	Overall Height	Wheel Bearing
100mm	150kgs	135mm	Wheels With Ball Bearings

- Equipped with rear brake-type locking Casters. Welded Caster Fork. Zine-Plated, plate Mounting Type. Cast Iron wheel Wheel Wheel Hub, High-Quality Resilient Rubber rims. Black finish, Ball Bearings.
- Wheel surface: High-quality elastic rubber
- Wheel Center: Iron core / Cast iron core

Product descriptions are for reference only. The actual product shall prevail.

Product Data Sheet | 3D Drawing Request

3D drawings are for members only. Please log in to download.

Product Data Sheet

Metric | Imperial

Wheel Diameter	100mm	Wheel Width	35mm
Wheel Bearing	Wheels With Ball Bearings	Plate Size	115 x 100mm
Bolt Hole Spacing	85 x 70mm	Plate Hole	20 x 11mm
Offset	30mm	Swivel Interference	160mm
Overall Height	135mm	Swivel Radius	80mm
Hardness Of Tread	85±5° Shore A	Load Capacity (Dynamic)	150kgs
Load Capacity (Static)	225kgs	Temperature	-20°C to +80°C
Fork Type	Swivel Caster With Rear Brake	Stainless	N/A
Electrical Conductivity	N/A	Anti-Static	N/A
Weight	1.9kgs	Standard	ISO22883

* For any deviation between metric and imperial spec, please refer to the metric spec.

Performance

Rolling Smoothness
Max. 5 points Score: 3

Quiet Operation
Max. 5 points Score: 4

Floor Surface Preservation
Max. 5 points Score: 4

Downloads

PDF **TW-41104040040071.pdf**
Product Data Sheet

3D **4110404004008-7.rar**
3D drawings are for members only. Please log in to download.

Related Products

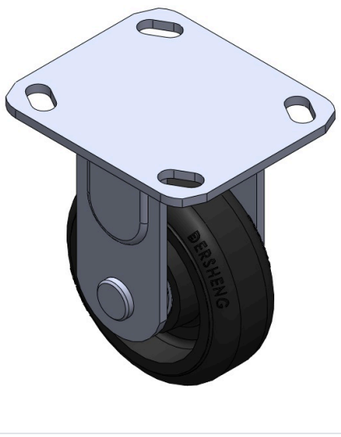

1104-D series
Rubber wheel (black) Wheel diameter × wheel width 100 x…
TW-4110404001007
wheel diameter 100 mm | dynamic load 150 kg | overall height 135 mm
View specs →

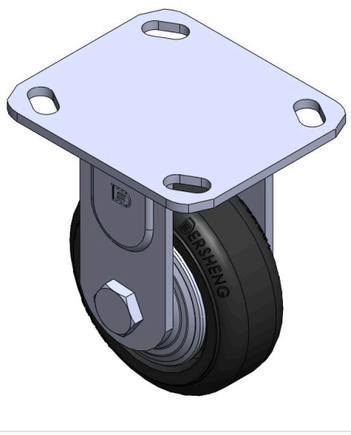

1104-D series
Rubber wheel (black) Wheel diameter × wheel width 100 x…
TW-4110404001011
wheel diameter 100 mm | dynamic load 150 kg | overall height 135 mm
View specs →



1104-D series
Rubber wheel (black) Wheel diameter × wheel width 100 x…
TW-4110404002005
wheel diameter 100 mm | dynamic load 150 kg | overall height 135 mm
View specs →



1104-D series
Rubber wheel (black) Wheel diameter × wheel width 100 x…
TW-4110404002012
wheel diameter 100 mm | dynamic load 150 kg | overall height 135 mm
View specs →