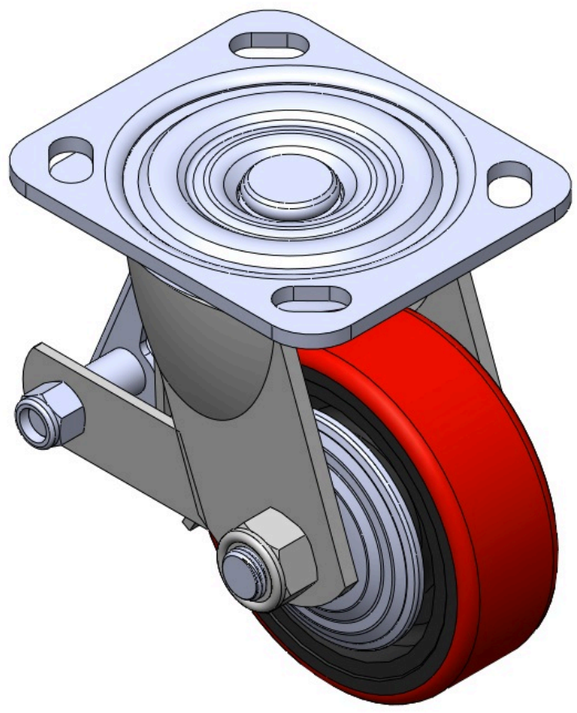

Picture may differ from original product



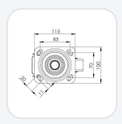

1104-D series

# PU Wheel Diameter × Wheel Width 100 x 34mm

TW-4110404004007 Copy model no.

| Wheel Diameter | Load Capacity (Dynamic) | Overall Height | Wheel Bearing |
|---|---|---|---|
| 100mm | 200kgs | 135mm | Wheels With Ball Bearings |

- Equipped with rear brake-type locking Casters. Welded Caster Fork. Zine-Plated, plate Mounting Type. Cast Iron wheel Wheel Wheel Hub, High Quality Polyurethane Wheel Tread (with cap). Red color, Bearing—Ball Bearings.
- Wheel surface: High-quality polyurethane
- Wheel Center: Iron core/Cast iron core

Product descriptions are for reference only. The actual product shall prevail.

Product Data Sheet (Metric) | 3D Drawing Request

3D drawings are for members only. Please log in to download.

## Product Data Sheet

Metric | Imperial

| | | | |
|---|---|---|---|
| Wheel Diameter | 100mm | Wheel Width | 34mm |
| Wheel Bearing | Wheels With Ball Bearings | Plate Size | 115 x 100mm |
| Bolt Hole Spacing | 85 x 70mm | Plate Hole | 20 x 11mm |
| Offset | 30mm | Swivel Interference | 160mm |
| Overall Height | 135mm | Swivel Radius | 80mm |
| Hardness Of Tread | 92±5° Shore A | Load Capacity (Dynamic) | 200kgs |
| Load Capacity (Static) | 300kgs | Temperature | -20°C to +70°C |
| Fork Type | Swivel Caster With Rear Brake | Stainless | N/A |
| Electrical Conductivity | N/A | Anti-Static | N/A |
| Weight | 2.0kgs | Standard | ISO22883 |

* For any deviation between metric and imperial spec, please refer to the metric spec.

## Performance

**Rolling Smoothness**
Max. 5 points Score: 3

**Quiet Operation**
Max. 5 points Score: 4

**Floor Surface Preservation**
Max. 5 points Score: 4

## Downloads

PDF **1104-EN-202610012.pdf**
Product Data Sheet (Metric)

3D **4110404004007-7.rar**
3D drawings are for members only. Please log in to download.

## Related Products

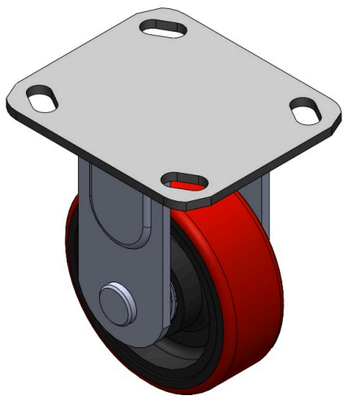

1104-D series
**PU Wheel Diameter × Wheel Width 100 x 34mm**
TW-4110404001001

| wheel diameter | dynamic load | overall height |
|---|---|---|
| 100 mm | 200 kg | 135 mm |

View specs →

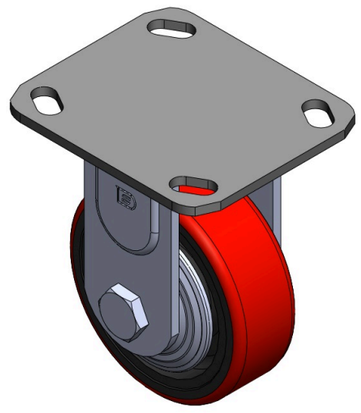

1104-D series
**PU Wheel Diameter × Wheel Width 100 x 34mm**
TW-4110404001008

| wheel diameter | dynamic load | overall height |
|---|---|---|
| 100 mm | 200 kg | 135 mm |

View specs →



1104-D series
**PU Wheel Diameter × Wheel Width 100 x 34mm**
TW-4110404002001

| wheel diameter | dynamic load | overall height |
|---|---|---|
| 100 mm | 200 kg | 135 mm |

View specs →

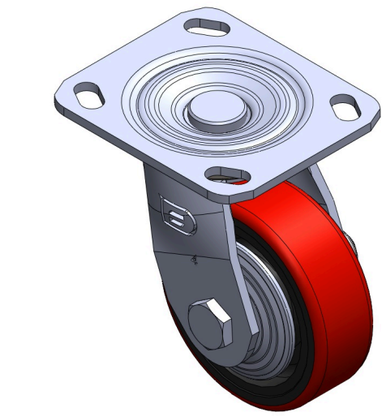

1104-D series
**PU Wheel Diameter × Wheel Width 100 x 34mm**
TW-4110404002011

| wheel diameter | dynamic load | overall height |
|---|---|---|
| 100 mm | 200 kg | 135 mm |

View specs →