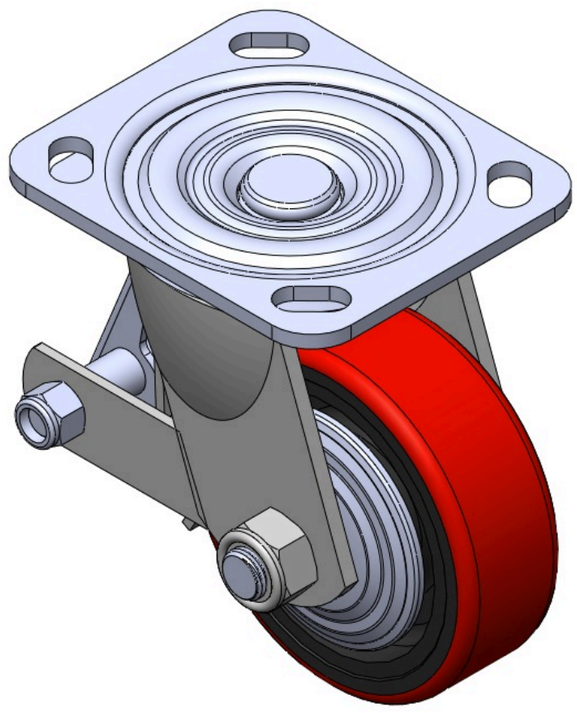

Picture may differ from original product



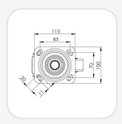

1104-D series

PU Wheel Diameter × Wheel Width 100 x 34mm

TW-4110404004007 Copy model no.

Wheel Diameter	Load Capacity (Dynamic)	Overall Height	Wheel Bearing
100mm	200kgs	135mm	Wheels With Ball Bearings

- Equipped with rear brake-type locking Casters. Welded Caster Fork. Zine-Plated, plate Mounting Type. Cast Iron wheel Wheel Wheel Hub, High Quality Polyurethane Wheel Tread (with cap). Red color, Bearing—Ball Bearings.
- Wheel surface: High-quality polyurethane
- Wheel Center: Iron core/Cast iron core

Product descriptions are for reference only. The actual product shall prevail.

Product Data Sheet (Metric) | 3D Drawing Request

3D drawings are for members only. Please log in to download.

Product Data Sheet

Metric | Imperial

Wheel Diameter	100mm	Wheel Width	34mm
Wheel Bearing	Wheels With Ball Bearings	Plate Size	115 x 100mm
Bolt Hole Spacing	85 x 70mm	Plate Hole	20 x 11mm
Offset	30mm	Swivel Interference	160mm
Overall Height	135mm	Swivel Radius	80mm
Hardness Of Tread	92±5° Shore A	Load Capacity (Dynamic)	200kgs
Load Capacity (Static)	300kgs	Temperature	-20°C to +70°C
Fork Type	Swivel Caster With Rear Brake	Stainless	N/A
Electrical Conductivity	N/A	Anti-Static	N/A
Weight	2.0kgs	Standard	ISO22883

* For any deviation between metric and imperial spec, please refer to the metric spec.

Performance

Rolling Smoothness
Max. 5 points Score: 3

Quiet Operation
Max. 5 points Score: 4

Floor Surface Preservation
Max. 5 points Score: 4

Downloads

PDF **TW-41104040040073.pdf**
Product Data Sheet (Metric)

3D **4110404004007-7.rar**
3D drawings are for members only. Please log in to download.

Related Products

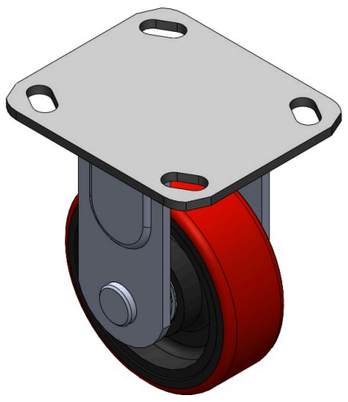

1104-D series
PU Wheel Diameter × Wheel Width 100 x 34mm
TW-4110404001001

wheel diameter	dynamic load	overall height
100 mm	200 kg	135 mm

View specs →

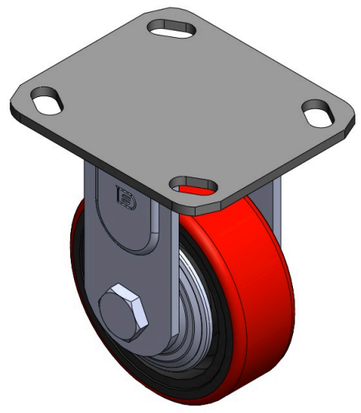

1104-D series
PU Wheel Diameter × Wheel Width 100 x 34mm
TW-4110404001008

wheel diameter	dynamic load	overall height
100 mm	200 kg	135 mm

View specs →



1104-D series
PU Wheel Diameter × Wheel Width 100 x 34mm
TW-4110404002001

wheel diameter	dynamic load	overall height
100 mm	200 kg	135 mm

View specs →

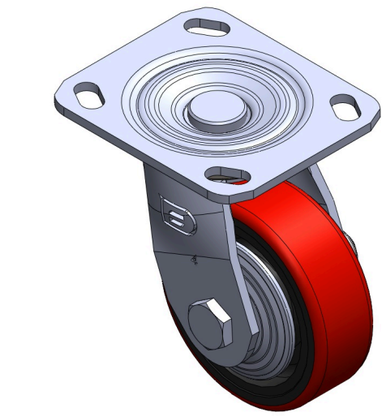

1104-D series
PU Wheel Diameter × Wheel Width 100 x 34mm
TW-4110404002011

wheel diameter	dynamic load	overall height
100 mm	200 kg	135 mm

View specs →