Choose another country or region to see content specific to your location.
United States & Other Regions
Continue

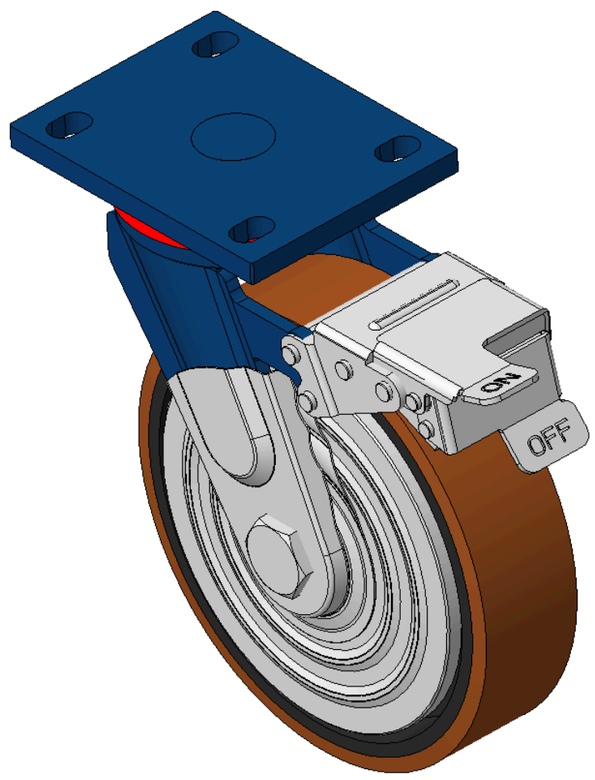

Picture may differ from original product



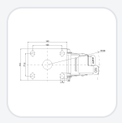

1102 B Type Caster Series

QPU (Brown Flat) Wheel Diameter x Wheel Width 200 x 50mm

KS-11020800534091 Copy model no.

Wheel Diameter	Load Capacity per Wheel (Dynamic)	Overall Height	Wheel Bearing
200mm	350kgs	248mm	Wheels With Ball Bearings

- Features front-brake locking Casters, Welded Caster Fork.
- Blue painted finish, Mounting Type - Top Plate, 105x77.5mm Bolt Hole Spacing.
- Cast Iron Wheel Center, High Quality Polyurethane Wheel Tread.
- Cast Iron Bearing—Ball Bearings, with specially designed anti-winding wheel covers.
- Wheel Tread: Hhigh-Quality Polyurethane
- Wheel Center: Iron core/Cast iron core

Product descriptions are for reference only. The actual product shall prevail.

Product Data Sheet (Metric)
3D Drawing Request

3D drawings are for members only. Please log in to download.

Product Data Sheet

Metric | Imperial

Wheel Diameter	200mm	Wheel Width	50mm
Wheel Bearing	Wheels With Ball Bearings	Plate Size	140 x 110mm
Bolt Hole Spacing	105 x 77.5mm	Plate Hole	20 x 13mm
Offset	62mm	Swivel Interference	370mm
Overall Height	248mm	Swivel Radius	185mm
Hardness Of Tread	92±5° Shore A	Load Capacity per Wheel (Dynamic)	350kgs
Load Capacity per Wheel (Static)	525kgs	Temperature	-20°C to +70°C
Fork Type	Swivel Caster With Front Brake	Stainless	N/A
Electrical Conductivity	N/A	Anti-Static	N/A
Weight	6.60kgs	Standard	ISO22883

* For any deviation between metric and imperial spec, please refer to the metric spec.

Performance

Rolling Smoothness
Max. 5 points Score: 5

Quiet Operation
Max. 5 points Score: 5

Floor Surface Preservation
Max. 5 points Score: 5

Downloads

PDF **1102-EN-KS2026112702.pdf**
Product Data Sheet (Metric)

3D **1102-CN-KS2026112702-d261127093857.rar**
3D drawings are for members only. Please log in to download.

Related Products

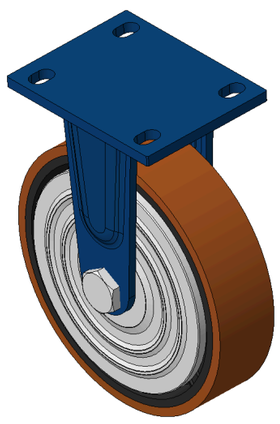

1102 B Type Caster Series

KS-11020800531041 QPU (Brown Flat) Wheel Diameter x Wheel Width 20···

wheel diameter	dynamic load	overall height
200 mm	450 kg	248 mm

View specs →

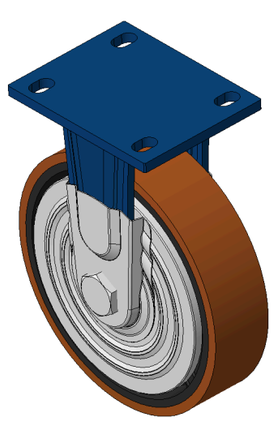

1102 B Type Caster Series

KS-11020800531071 QPU (Brown Flat) Wheel Diameter x Wheel Width 20···

wheel diameter	dynamic load	overall height
200 mm	450 kg	248 mm

View specs →

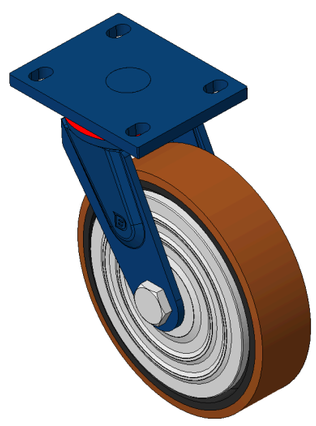

1102 B Type Caster Series

KS-11020800532041 QPU (Brown Flat) Wheel Diameter x Wheel Width 20···

wheel diameter	dynamic load	overall height
200 mm	450 kg	248 mm

View specs →

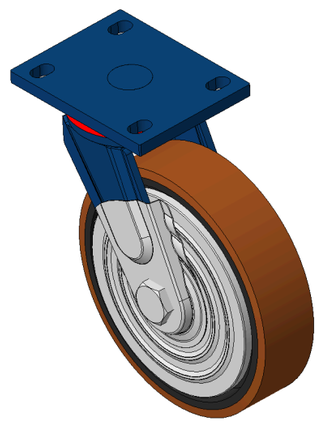

1102 B Type Caster Series

KS-11020800532071 QPU (Brown Flat) Wheel Diameter x Wheel Width 20···

wheel diameter	dynamic load	overall height
200 mm	450 kg	248 mm

View specs →