Choose another country or region to see content specific to your location.
United States & Other Regions
Continue

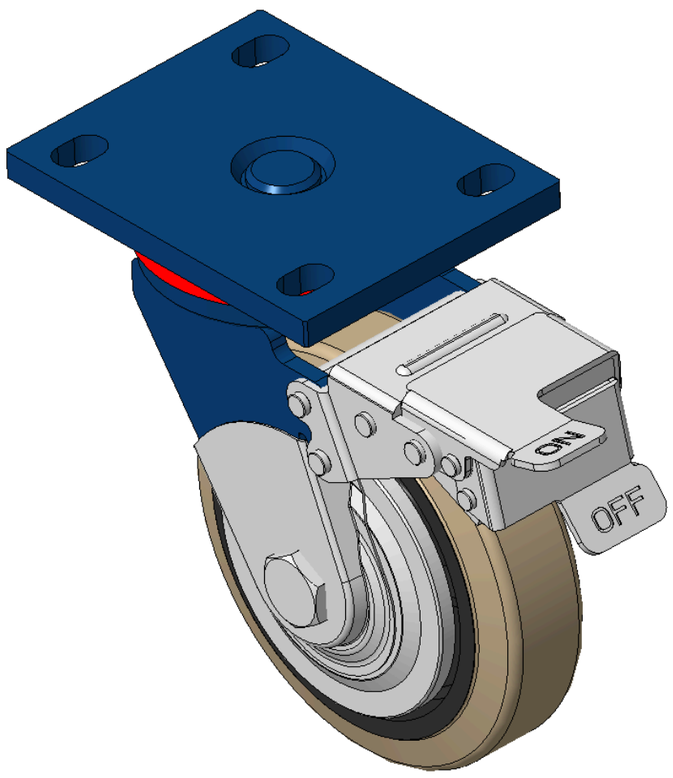

Picture may differ from original product


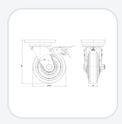
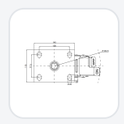

1102 B Type Caster Series

Non-marking NBR Rubber (milling) Wheel Diameter x Wheel Width 150 x 40mm

KS-11020600044161 Copy model no.

Wheel Diameter	Load Capacity per Wheel (Dynamic)	Overall Height	Wheel Bearing
150mm	335kgs	197mm	Wheels With Ball Bearings

- Equipped with front brake, locking Casters, Welded Caster Fork.
- Blue painted finish, Mounting Type - Top Plate Bolt Hole Spacing—105x77.5mm.
- Cast Iron Wheel Center, High-Quality, high-elasticity rubber rim.
- Ball Bearing bearings, with specially designed anti-winding wheel covers.
- Wheel tread: High-quality, high-elasticity rubber tread
- Wheel Center: Iron core / Cast iron core

Product descriptions are for reference only. The actual product shall prevail.

3D Drawing Request

3D drawings are for members only. Please log in to download.

Product Data Sheet

Metric | Imperial

Wheel Diameter	150mm	Wheel Width	40mm
Wheel Bearing	Wheels With Ball Bearings	Plate Size	140 x 110mm
Bolt Hole Spacing	105 x 77.5mm	Plate Hole	20 x 13mm
Offset	42mm	Swivel Interference	321mm
Overall Height	197mm	Swivel Radius	160.5mm
Hardness Of Tread	85±5° Shore A	Load Capacity per Wheel (Dynamic)	335kgs
Load Capacity per Wheel (Static)	502.5kgs	Temperature	-20°C to +80°C
Fork Type	Swivel Caster With Front Brake	Stainless	N/A
Electrical Conductivity	N/A	Anti-Static	N/A
Weight	3.17kgs	Standard	ISO22883

* For any deviation between metric and imperial spec, please refer to the metric spec.

Performance

Rolling Smoothness
Max. 5 points Score: 3

Quiet Operation
Max. 5 points Score: 4

Floor Surface Preservation
Max. 5 points Score: 4

Downloads

3D 1102-CN-KS2026112503-d261125094513.rar
3D drawings are for members only. Please log in to download. ›

Related Products

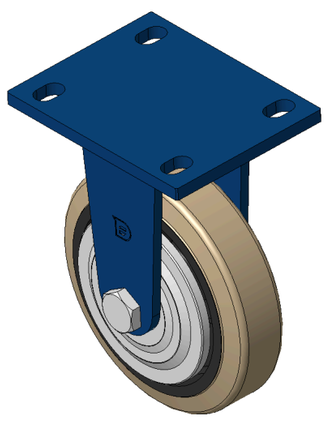

1102 B Type Caster Series
Non-marking NBR Rubber (milling) Wheel Diameter x Wheel Width 15…
KS-11020600041131
wheel diameter 150 mm | dynamic load 335 kg | overall height 197 mm
View specs →

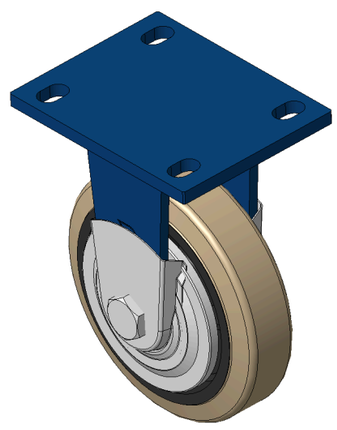

1102 B Type Caster Series
Non-marking NBR Rubber (milling) Wheel Diameter x Wheel Width 15…
KS-11020600041121
wheel diameter 150 mm | dynamic load 335 kg | overall height 197 mm
View specs →

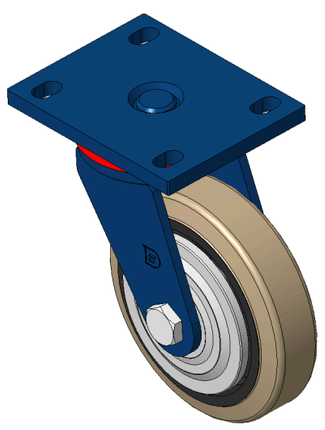

1102 B Type Caster Series
Non-marking NBR Rubber (milling) Wheel Diameter x Wheel Width 15…
KS-11020600042161
wheel diameter 150 mm | dynamic load 335 kg | overall height 197 mm
View specs →

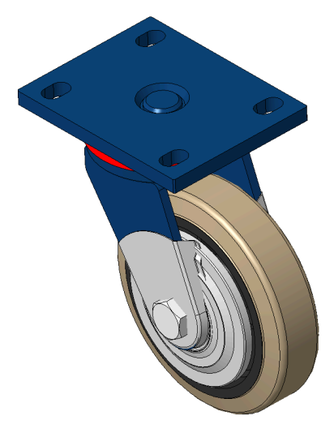

1102 B Type Caster Series
Non-marking NBR Rubber (milling) Wheel Diameter x Wheel Width 15…
KS-11020600042171
wheel diameter 150 mm | dynamic load 335 kg | overall height 197 mm
View specs →