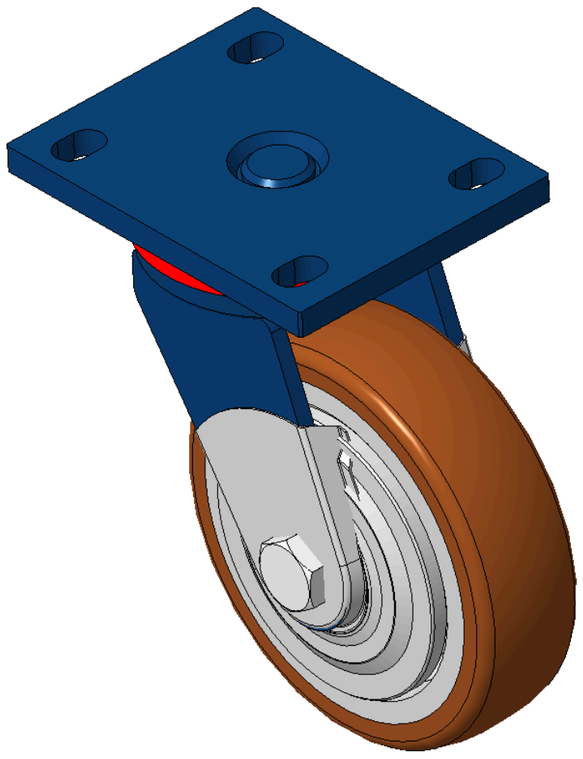

Picture may differ from original product


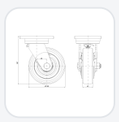
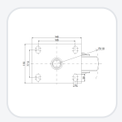

1102 B Type Caster Series

QPU (Brown round) Wheel Diameter × Wheel Width 150 x 42mm

KS-11020600532161 Copy model no.

Wheel Diameter	Load Capacity per Wheel (Dynamic)	Overall Height	Wheel Bearing
150mm	335kgs	197mm	Wheels With Ball Bearings

- Swivel Casters, Welded Caster Fork—105x77.5mm Bolt Hole Spacing
- Blue painted finish, Mounting Type - Top Plate device
- Cast Iron Wheel Center, High Quality Polyurethane Wheel Tread
- Bearings—Ball Bearings, equipped with special anti-winding wheel covers
- Wheel Tread: Hhigh-Quality Polyurethane
- Wheel Center: Iron core / Cast iron core

Product descriptions are for reference only. The actual product shall prevail.

Product Data Sheet

3D Drawing Request

3D drawings are for members only. Please log in to download.

Product Data Sheet

Metric Imperial

Wheel Diameter	150mm	Wheel Width	42mm
Wheel Bearing	Wheels With Ball Bearings	Plate Size	140 x 110mm
Bolt Hole Spacing	105 x 77.5mm	Plate Hole	20 x 13mm
Offset	42mm	Swivel Interference	236mm
Overall Height	197mm	Swivel Radius	118mm
Hardness Of Tread	92±5° Shore A	Load Capacity per Wheel (Dynamic)	335kgs
Load Capacity per Wheel (Static)	502.5kgs	Temperature	-20°C to +70°C
Fork Type	Swivel Caster	Stainless	N/A
Electrical Conductivity	N/A	Anti-Static	N/A
Weight	2.01kgs	Standard	ISO22883

* For any deviation between metric and imperial spec, please refer to the metric spec.

Performance

Rolling Smoothness
Max. 5 points Score: 5

Quiet Operation
Max. 5 points Score: 5

Floor Surface Preservation
Max. 5 points Score: 5

Downloads

PDF **1102-EN-KS2026112415.pdf**
Product Data Sheet

3D **1102-CN-KS2026112415-d261124191151.rar**
3D drawings are for members only. Please log in to download.

Related Products

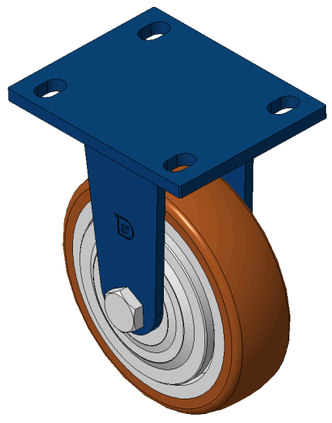

1102 B Type Caster Series

QPU (Brown round) Wheel Diameter × Wheel Width 150 x 42mm

KS-11020600531121

wheel diameter	dynamic load	overall height
150 mm	335 kg	197 mm

View specs →

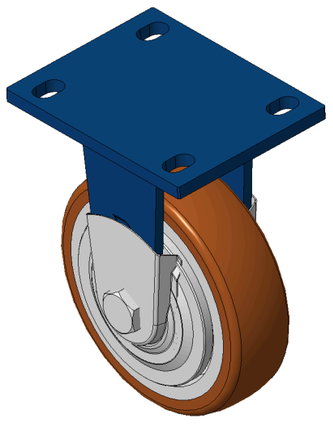

1102 B Type Caster Series

QPU (Brown round) Wheel Diameter × Wheel Width 150 x 42mm

KS-11020600531131

wheel diameter	dynamic load	overall height
150 mm	335 kg	197 mm

View specs →

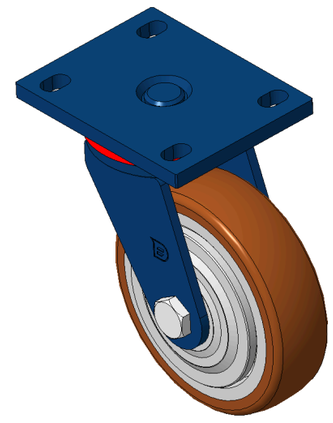

1102 B Type Caster Series

QPU (Brown round) Wheel Diameter × Wheel Width 150 x 42mm

KS-11020600532141

wheel diameter	dynamic load	overall height
150 mm	335 kg	197 mm

View specs →