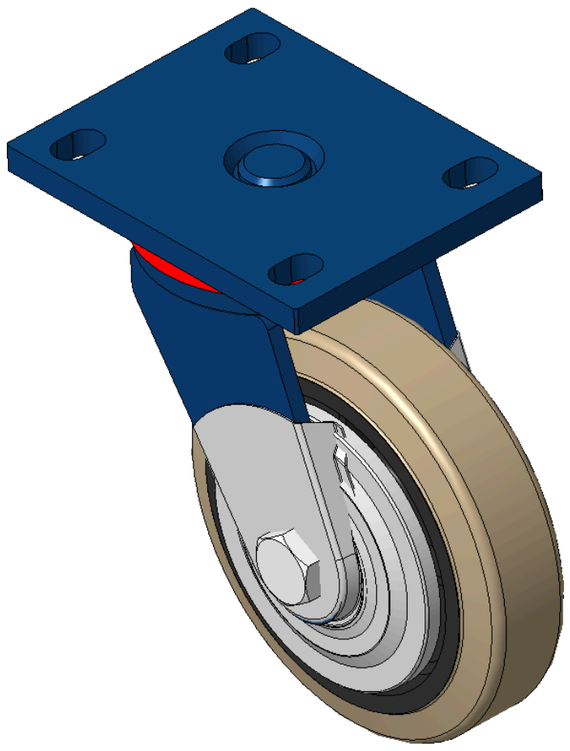

Picture may differ from original product



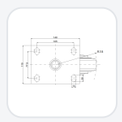

1102 B Type Caster Series

Non-marking NBR Rubber (milling) Wheel Diameter x Wheel Width 150 x 40mm

KS-11020600042171 Copy model no.

Wheel Diameter	Load Capacity per Wheel (Dynamic)	Overall Height	Wheel Bearing
150mm	335kgs	197mm	Wheels With Ball Bearings

- Swivel Casters, Welded Caster Fork—105x77.5mm Bolt Hole Spacing
- Blue painted finish, Mounting Type - Top Plate device
- Cast Iron Wheel Center, High Quality Polyurethane Wheel Tread
- Bearings—Ball Bearings, equipped with special anti-winding wheel covers
- Wheel Tread: Hhigh-Quality Polyurethane
- Wheel Center: Iron core / Cast iron core

Product descriptions are for reference only. The actual product shall prevail.

3D Drawing Request

3D drawings are for members only. Please log in to download.

Product Data Sheet

Metric | Imperial

Wheel Diameter	**150mm**	Wheel Width	**40mm**
Wheel Bearing	**Wheels With Ball Bearings**	Plate Size	**140 x 110mm**
Bolt Hole Spacing	**105 x 77.5mm**	Plate Hole	**20 x 13mm**
Offset	**42mm**	Swivel Interference	**236mm**
Overall Height	**197mm**	Swivel Radius	**118mm**
Hardness Of Tread	**85±5° Shore A**	Load Capacity per Wheel (Dynamic)	**335kgs**
Load Capacity per Wheel (Static)	**502.5kgs**	Temperature	**-20°C to +80°C**
Fork Type	**Swivel Caster**	Stainless	**N/A**
Electrical Conductivity	**N/A**	Anti-Static	**N/A**
Weight	**2.01kgs**	Standard	**ISO22883**

* For any deviation between metric and imperial spec, please refer to the metric spec.

Performance

Rolling Smoothness
Max. 5 points Score: 3

Quiet Operation
Max. 5 points Score: 4

Floor Surface Preservation
Max. 5 points Score: 4

Downloads

3D **1102-CN-KS2026112409-d261124154909.rar**
3D drawings are for members only. Please log in to download. ›

Related Products

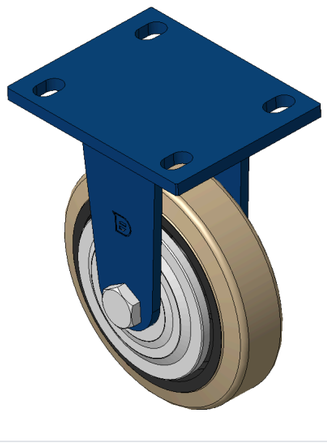

1102 B Type Caster Series
Non-marking NBR Rubber (milling) Wheel Diameter x Wheel Width 15…
KS-11020600041131

wheel diameter	dynamic load	overall height
150 mm	335 kg	197 mm

View specs →

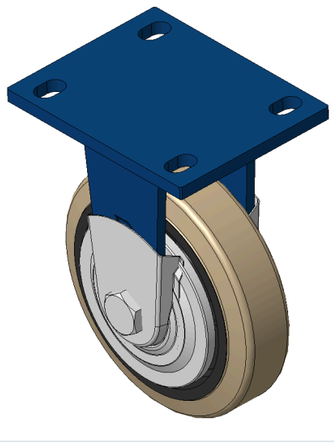

1102 B Type Caster Series
Non-marking NBR Rubber (milling) Wheel Diameter x Wheel Width 15…
KS-11020600041121

wheel diameter	dynamic load	overall height
150 mm	335 kg	197 mm

View specs →

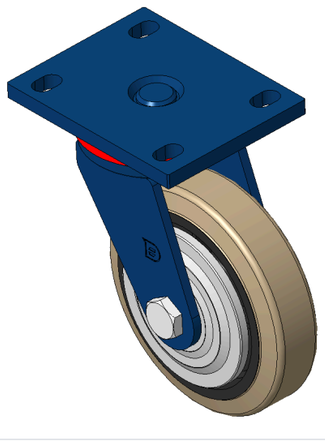

1102 B Type Caster Series
Non-marking NBR Rubber (milling) Wheel Diameter x Wheel Width 15…
KS-11020600042161

wheel diameter	dynamic load	overall height
150 mm	335 kg	197 mm

View specs →