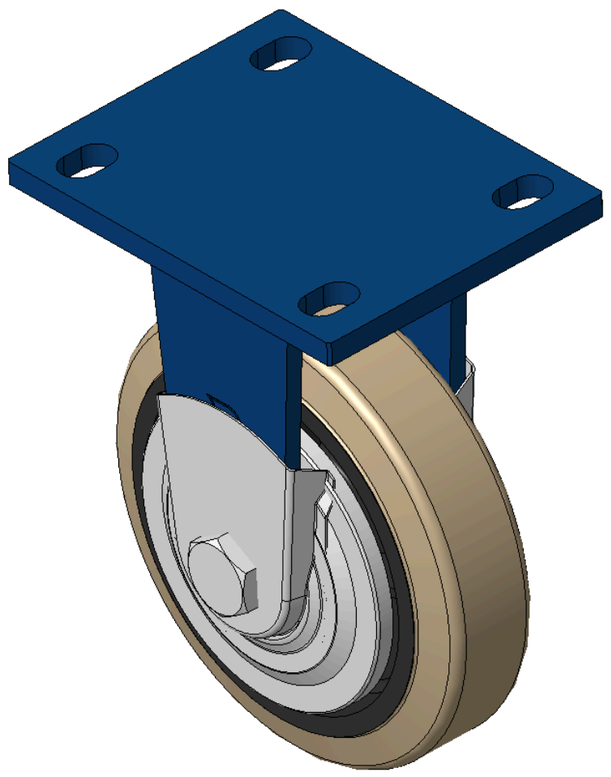

Picture may differ from original product



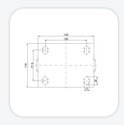

1102 B Type Caster Series

Non-marking NBR Rubber (milling) Wheel Diameter x Wheel Width 150 x 40mm

KS-11020600041121 Copy model no.

Wheel Diameter	Load Capacity (Dynamic)	Overall Height	Wheel Bearing
150mm	335kgs	197mm	Wheels With Ball Bearings

- Rigid Casters, Welded Caster Fork—105x77.5mm Bolt Hole Spacing
- Blue painted surface, Mounting Type - Top Plate device
- Cast Iron Wheel Center, High Quality Polyurethane Wheel Tread
- Cast Iron original color, Bearing—Ball Bearings, equipped with special anti-winding wheel covers
- Wheel Tread: Hhigh-Quality Polyurethane
- Wheel Center: Iron core / Cast iron core

Product descriptions are for reference only. The actual product shall prevail.

3D Drawing Request

3D drawings are for members only. Please log in to download.

Product Data Sheet

Metric | Imperial

Wheel Diameter	150mm	Wheel Width	40mm
Wheel Bearing	Wheels With Ball Bearings	Plate Size	140 x 110mm
Bolt Hole Spacing	105 x 77.5mm	Plate Hole	20 x 13mm
Overall Height	197mm	Hardness Of Tread	85±5° Shore A
Load Capacity (Dynamic)	335kgs	Load Capacity (Static)	502.5kgs
Temperature	-20°C to +80°C	Fork Type	Rigid Caster
Stainless	N/A	Electrical Conductivity	N/A
Anti-Static	N/A	Weight	2.01kgs
Standard	ISO22883		

* For any deviation between metric and imperial spec, please refer to the metric spec.

Performance

Rolling Smoothness
Max. 5 points Score: 3

Quiet Operation
Max. 5 points Score: 4

Floor Surface Preservation
Max. 5 points Score: 4

Downloads

3D **1102-CN-KS2026112401-d261124105226.rar**
3D drawings are for members only. Please log in to download. ›

Related Products

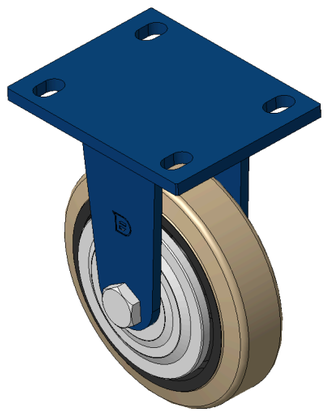

1102 B Type Caster Series

Non-marking NBR Rubber (milling) Wheel Diameter x Wheel Width 15…

KS-11020600041131

wheel diameter	dynamic load	overall height
150 mm	335 kg	197 mm

View specs →