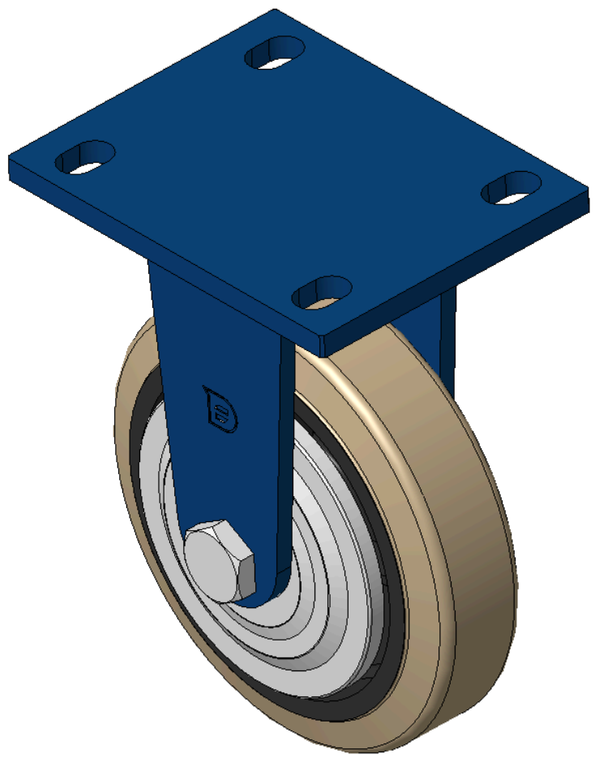

Picture may differ from original product



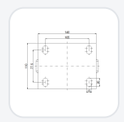

1102 B Type Caster Series

# Non-marking NBR Rubber (milling) Wheel Diameter x Wheel Width 150 x 40mm

KS-11020600041131 Copy model no.

| Wheel Diameter | Load Capacity (Dynamic) | Overall Height | Wheel Bearing |
|---|---|---|---|
| 150mm | 335kgs | 197mm | Wheels With Ball Bearings |

- Rigid Casters, Welded Caster Fork—105x77.5mm Bolt Hole Spacing
- Blue painted finish, Mounting Type - Top Plate device
- Cast Iron Wheel Center, High Quality Polyurethane Wheel Tread
- Cast Iron original color, Bearing—Ball Bearings.
- Wheel Tread: Hhigh-Quality Polyurethane
- Wheel Center: Iron core / Cast iron core

Product descriptions are for reference only. The actual product shall prevail.

Product Data Sheet (Metric) | 3D Drawing Request

3D drawings are for members only. Please log in to download.

## Product Data Sheet

Metric | Imperial

| | | | |
|---|---|---|---|
| Wheel Diameter | 150mm | Wheel Width | 40mm |
| Wheel Bearing | Wheels With Ball Bearings | Plate Size | 140 x 110mm |
| Bolt Hole Spacing | 105 x 77.5mm | Plate Hole | 20 x 13mm |
| Overall Height | 197mm | Hardness Of Tread | 85±5° Shore A |
| Load Capacity (Dynamic) | 335kgs | Load Capacity (Static) | 502.5kgs |
| Temperature | -20°C to +80°C | Fork Type | Rigid Caster |
| Stainless | N/A | Electrical Conductivity | N/A |
| Anti-Static | N/A | Weight | 2.01kgs |
| Standard | ISO22883 | | |

* For any deviation between metric and imperial spec, please refer to the metric spec.

## Performance

**Rolling Smoothness**
Max. 5 points Score: 3

**Quiet Operation**
Max. 5 points Score: 4

**Floor Surface Preservation**
Max. 5 points Score: 4

## Downloads

PDF **1102-EN-KS2026112320.pdf**
Product Data Sheet (Metric)

3D **1102-CN-KS2026112320-d261124103037.rar**
3D drawings are for members only. Please log in to download.

## Related Products

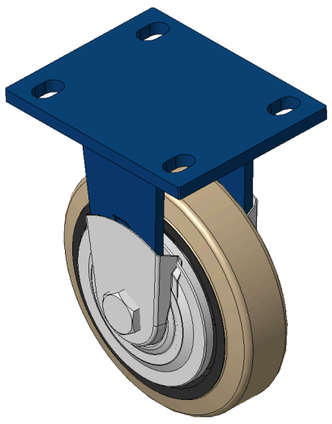

1102 B Type Caster Series

**Non-marking NBR Rubber (milling) Wheel Diameter x Wheel Width 15…**

KS-11020600041121

| wheel diameter | dynamic load | overall height |
|---|---|---|
| 150 mm | 335 kg | 197 mm |

View specs →