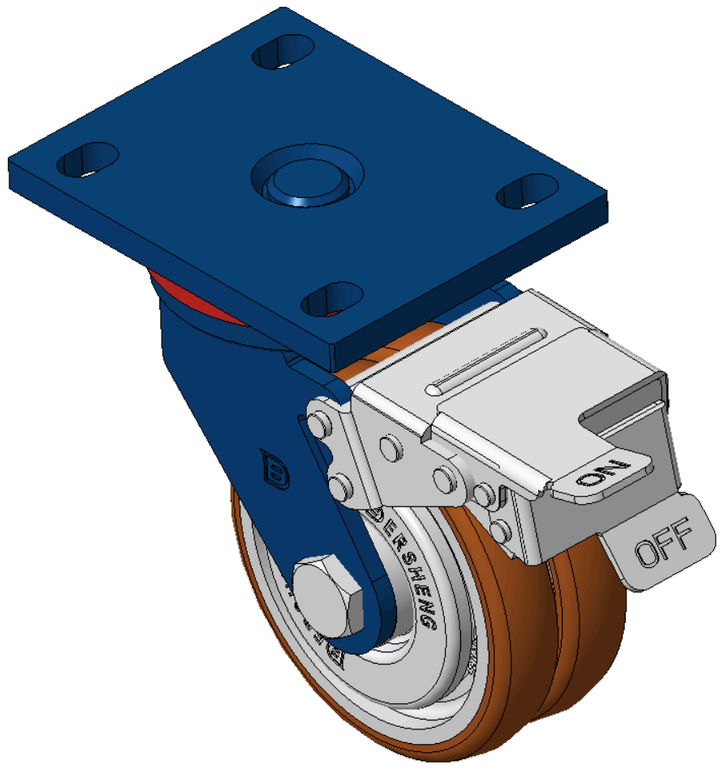

Picture may differ from original product


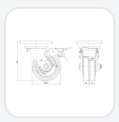
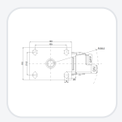

1102 B Type Caster Series

ZQPU (milling brown) Wheel Diameter x Wheel Width 125 x 24mm

KS-11020501804081 Copy model no.

Wheel Diameter	Load Capacity (Dynamic)	Overall Height	Wheel Bearing
125mm	335kgs	170mm	Wheels With Ball Bearings

- Equipped with front brake, With locking system Casters, Welded Caster Fork
- Blue painted finish, Mounting Type - Top Plate, 105x77.5mm Bolt Hole Spacing
- Cast Iron Wheel Center, High-Quality, high-elasticity rubber rim, Cast Iron brown
- Bearings—Ball Bearings
- Wheel surface: Made of high-quality, high-elasticity rubber
- Wheel Center: Iron core / Cast iron core

Product descriptions are for reference only. The actual product shall prevail.

3D Drawing Request

3D drawings are for members only. Please log in to download.

Product Data Sheet

Metric | Imperial

Wheel Diameter	125mm	Wheel Width	24mm
Wheel Bearing	Wheels With Ball Bearings	Plate Size	140 x 110mm
Bolt Hole Spacing	105 x 77.5mm	Plate Hole	20 x 13mm
Offset	45mm	Swivel Interference	317mm
Overall Height	170mm	Swivel Radius	158.5mm
Hardness Of Tread	92±5° Shore A	Load Capacity (Dynamic)	335kgs
Load Capacity (Static)	502.5kgs	Temperature	-20°C to +70°C
Fork Type	Swivel Caster With Front Brake	Stainless	N/A
Electrical Conductivity	N/A	Anti-Static	N/A
Weight	3.7kgs	Standard	ISO22883

* For any deviation between metric and imperial spec, please refer to the metric spec.

Performance

Rolling Smoothness
Max. 5 points Score: 5

Quiet Operation
Max. 5 points Score: 5

Floor Surface Preservation
Max. 5 points Score: 5

Downloads

3D **1102-CN-KS2026112319-d261124091552.rar**
3D drawings are for members only. Please log in to download. ›

Related Products

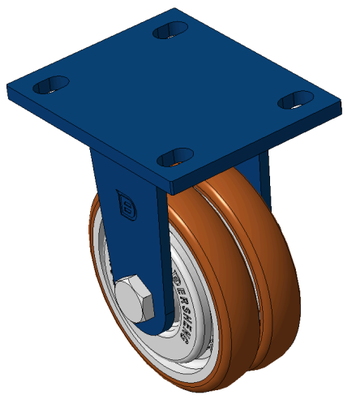

1102 B Type Caster Series

ZQPU (milling brown) Wheel Diameter x Wheel Width 125 x···

KS-11020500801031

wheel diameter	dynamic load	overall height
125 mm	335 kg	170 mm

View specs →

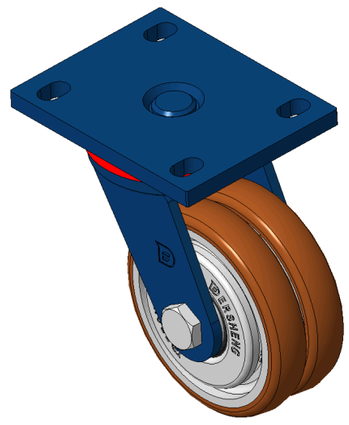

1102 B Type Caster Series

ZQPU (milling brown) Wheel Diameter x Wheel Width 125 x···

KS-11020501802031

wheel diameter	dynamic load	overall height
125 mm	200 kg	170 mm

View specs →