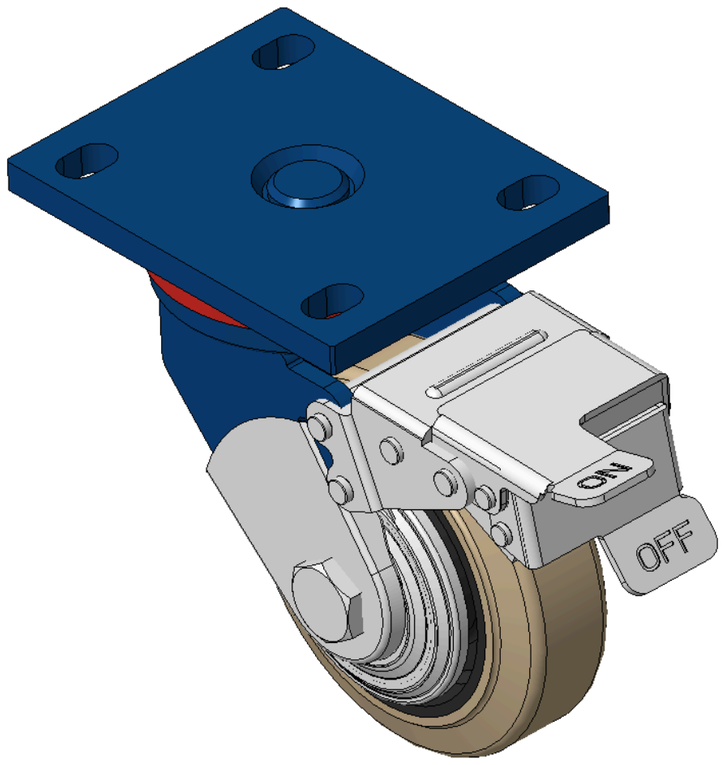


Picture may differ from original product



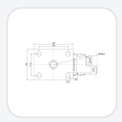

1102 B Type Caster Series

# Non-marking NBR Rubber (milling) Wheel Diameter x Wheel Width 125 x 40mm

KS-11020500044131 Copy model no.

| Wheel Diameter | Load Capacity (Dynamic) | Overall Height | Wheel Bearing |
|---|---|---|---|
| 125mm | 335kgs | 170mm | Wheels With Ball Bearings |

- Equipped with front brake, With locking system Casters, Welded Caster Fork.
- Blue painted finish, Mounting Type - Top Plate, 105x77.5mm Bolt Hole Spacing.
- Cast Iron Wheel Center, High-Quality, high-elasticity rubber rim.
- Ball Bearing bearings with specially designed anti-winding wheel covers.
- Wheel surface: Made of high-quality, high-elasticity rubber
- Wheel Center: Iron core / Cast iron core

Product descriptions are for reference only. The actual product shall prevail.

Product Data Sheet

3D Drawing Request

3D drawings are for members only. Please log in to download.

## Product Data Sheet

Metric | Imperial

| | | | |
|---|---|---|---|
| Wheel Diameter | 125mm | Wheel Width | 40mm |
| Wheel Bearing | Wheels With Ball Bearings | Plate Size | 140 x 110mm |
| Bolt Hole Spacing | 105 x 77.5mm | Plate Hole | 20 x 13mm |
| Offset | 45mm | Swivel Interference | 317mm |
| Overall Height | 170mm | Swivel Radius | 158.5mm |
| Hardness Of Tread | 85±5° Shore A | Load Capacity (Dynamic) | 335kgs |
| Load Capacity (Static) | 502.5kgs | Temperature | -20°C to +80°C |
| Fork Type | Swivel Caster With Front Brake | Stainless | N/A |
| Electrical Conductivity | N/A | Anti-Static | N/A |
| Weight | 3.75kgs | Standard | ISO22883 |

* For any deviation between metric and imperial spec, please refer to the metric spec.

## Performance

**Rolling Smoothness**
Max. 5 points Score: 3

**Quiet Operation**
Max. 5 points Score: 4

**Floor Surface Preservation**
Max. 5 points Score: 4

## Downloads

PDF **1102-EN-KS2026112315.pdf**
Product Data Sheet

3D **1102-CN-KS2026112315-d261123181558.rar**
3D drawings are for members only. Please log in to download.

## Related Products

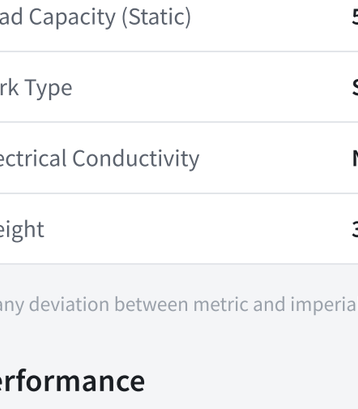

1102 B Type Caster Series
**Non-marking NBR Rubber (milling) Wheel Diameter x Wheel Width 12…**
KS-11020500041051

| wheel diameter | dynamic load | overall height |
|---|---|---|
| 125 mm | 200 kg | 170 mm |

View specs →

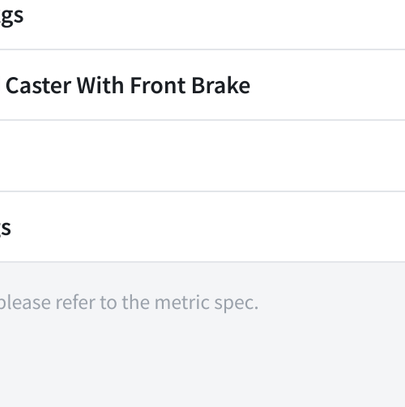

1102 B Type Caster Series
**Non-marking NBR Rubber (milling) Wheel Diameter x Wheel Width 12…**
KS-11020500041061

| wheel diameter | dynamic load | overall height |
|---|---|---|
| 125 mm | 200 kg | 170 mm |

View specs →

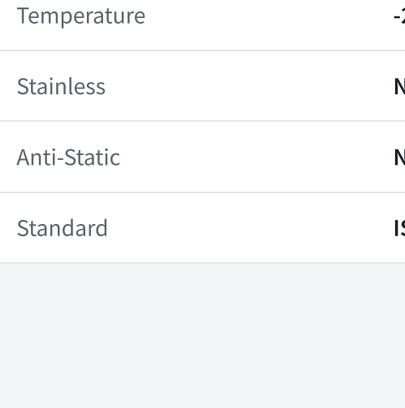

1102 B Type Caster Series
**Non-marking NBR Rubber (milling) Wheel Diameter x Wheel Width 12…**
KS-11020500042051

| wheel diameter | dynamic load | overall height |
|---|---|---|
| 125 mm | 200 kg | 170 mm |

View specs →

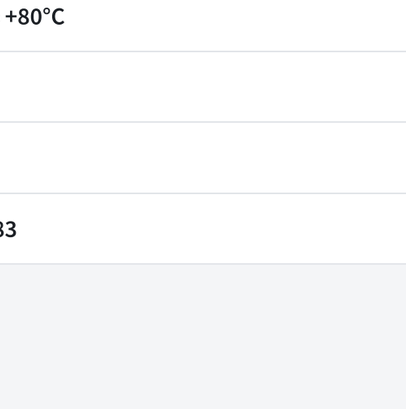

1102 B Type Caster Series
**Non-marking NBR Rubber (milling) Wheel Diameter x Wheel Width 12…**
KS-11020500042061

| wheel diameter | dynamic load | overall height |
|---|---|---|
| 125 mm | 200 kg | 170 mm |

View specs →