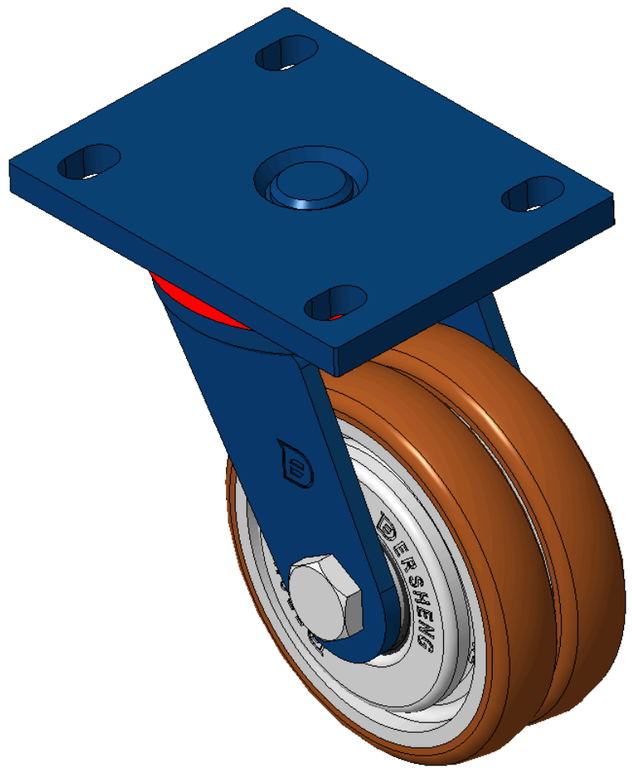

Picture may differ from original product


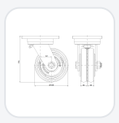
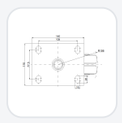

1102 B Type Caster Series

ZQPU (milling brown) Wheel Diameter x Wheel Width 125 x 24mm

KS-11020501802031 Copy model no.

Wheel Diameter	Load Capacity (Dynamic)	Overall Height	Wheel Bearing
125mm	200kgs	170mm	Wheels With Ball Bearings

- Modible Casters, Welded Caster Fork
- Blue painted finish, Mounting Type - Top Plate device, Bolt Hole Spacing 105x77.5
- Cast Iron Wheel Center, High-Quality, high-elasticity rubber Wheel Tread
- Bearings—Ball Bearings
- Wheel surface: Made of high-quality, high-elasticity rubber
- Wheel Center: Iron core / Cast iron core

Product descriptions are for reference only. The actual product shall prevail.

Product Data Sheet | 3D Drawing Request

3D drawings are for members only. Please log in to download.

Product Data Sheet

Metric | Imperial

Wheel Diameter	125mm	Wheel Width	24mm
Wheel Bearing	Wheels With Ball Bearings	Plate Size	140 x 110mm
Bolt Hole Spacing	105 x 77.5mm	Plate Hole	20 x 13mm
Offset	42mm	Swivel Interference	212mm
Overall Height	170mm	Swivel Radius	106mm
Hardness Of Tread	92±5° Shore A	Load Capacity (Dynamic)	200kgs
Load Capacity (Static)	300kgs	Temperature	-20°C to +70°C
Fork Type	Swivel Caster	Stainless	N/A
Electrical Conductivity	N/A	Anti-Static	N/A
Weight	2.75kgs	Standard	ISO22883

* For any deviation between metric and imperial spec, please refer to the metric spec.

Performance

Rolling Smoothness
Max. 5 points Score: 3

Quiet Operation
Max. 5 points Score: 4

Floor Surface Preservation
Max. 5 points Score: 4

Downloads

PDF **1102-EN-KS2026112313.pdf**
Product Data Sheet

3D **1102-CN-KS2026112313-d261123162705.rar**
3D drawings are for members only. Please log in to download.

Related Products

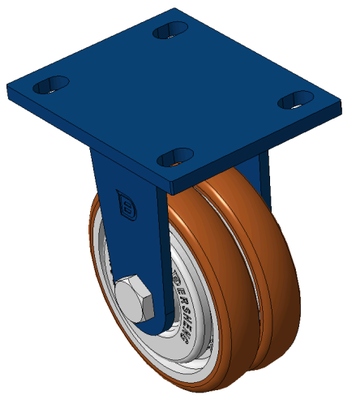

1102 B Type Caster Series

ZQPU (milling brown) Wheel Diameter x Wheel Width 125 x…

KS-11020500801031

wheel diameter	dynamic load	overall height
125 mm	335 kg	170 mm

View specs →