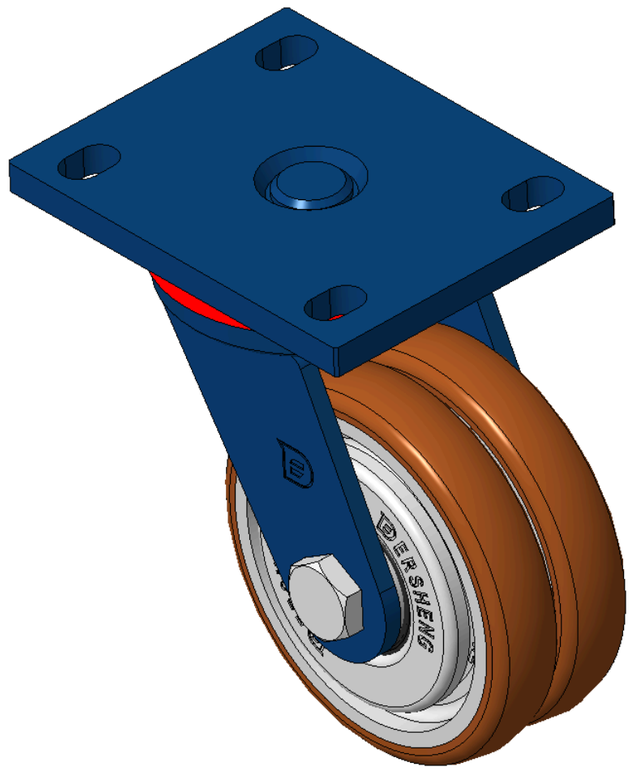

Picture may differ from original product


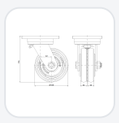
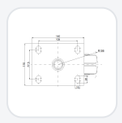

1102 B Type Caster Series

ZQPU (milling brown) Wheel Diameter x Wheel Width 125 x 24mm

KS-11020501802031 Copy model no.

Wheel Diameter	Load Capacity (Dynamic)	Overall Height	Wheel Bearing
125mm	200kgs	170mm	Wheels With Ball Bearings

- Modible Casters, Welded Caster Fork
- Blue painted finish, Mounting Type - Top Plate device, Bolt Hole Spacing 105x77.5
- Cast Iron Wheel Center, High-Quality, high-elasticity rubber Wheel Tread
- Bearings—Ball Bearings
- Wheel surface: Made of high-quality, high-elasticity rubber
- Wheel Center: Iron core / Cast iron core

Product descriptions are for reference only. The actual product shall prevail.

3D Drawing Request

3D drawings are for members only. Please log in to download.

Product Data Sheet

Metric | Imperial

Wheel Diameter	**125mm**	Wheel Width	**24mm**
Wheel Bearing	**Wheels With Ball Bearings**	Plate Size	**140 x 110mm**
Bolt Hole Spacing	**105 x 77.5mm**	Plate Hole	**20 x 13mm**
Offset	**42mm**	Swivel Interference	**212mm**
Overall Height	**170mm**	Swivel Radius	**106mm**
Hardness Of Tread	**92±5° Shore A**	Load Capacity (Dynamic)	**200kgs**
Load Capacity (Static)	**300kgs**	Temperature	**-20°C to +70°C**
Fork Type	**Swivel Caster**	Stainless	**N/A**
Electrical Conductivity	**N/A**	Anti-Static	**N/A**
Weight	**2.75kgs**	Standard	**ISO22883**

* For any deviation between metric and imperial spec, please refer to the metric spec.

Performance

Rolling Smoothness
Max. 5 points Score: 3

Quiet Operation
Max. 5 points Score: 4

Floor Surface Preservation
Max. 5 points Score: 4

Downloads

3D **1102-CN-KS2026112313-d261123162705.rar**
3D drawings are for members only. Please log in to download. ›

Related Products

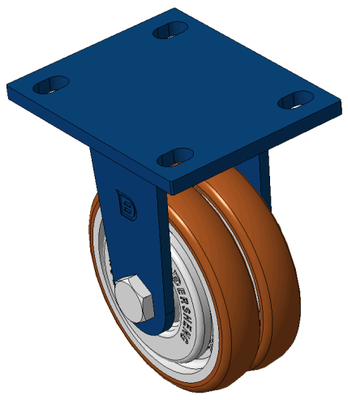

1102 B Type Caster Series

ZQPU (milling brown) Wheel Diameter x Wheel Width 125 x…

KS-11020500801031

wheel diameter	dynamic load	overall height
125 mm	335 kg	170 mm

View specs →