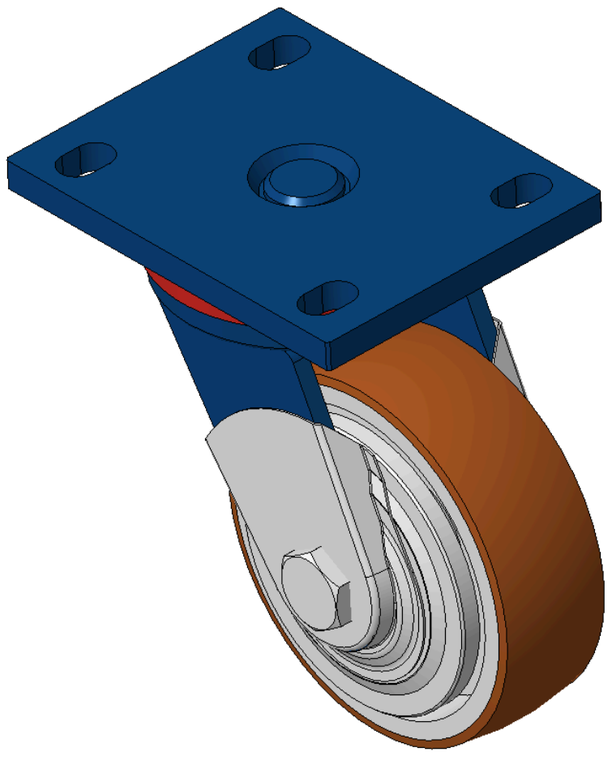

Picture may differ from original product



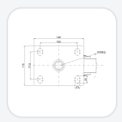

1102 B Type Caster Series

QPU (Brown round) Wheel Diameter × Wheel Width 125 x 40mm

KS-11020500532181 Copy model no.

Wheel Diameter	Load Capacity (Dynamic)	Overall Height	Wheel Bearing
125mm	340kgs	170mm	Wheels With Ball Bearings

- Portable Casters, Welded Caster Fork—105x77.5mm Bolt Hole Spacing
- Blue painted finish, Mounting Type - Top Plate device
- Cast Iron Wheel Center, High Quality Polyurethane Wheel Tread
- Cast Iron brown, Bearing—Ball Bearings, with wire-wound caps.
- Wheel Tread: Hhigh-Quality Polyurethane
- Wheel Center: Iron core/Cast iron core

Product descriptions are for reference only. The actual product shall prevail.

Product Data Sheet | 3D Drawing Request

3D drawings are for members only. Please log in to download.

Product Data Sheet

Metric | Imperial

Wheel Diameter	125mm	Wheel Width	40mm
Wheel Bearing	Wheels With Ball Bearings	Plate Size	140 x 110mm
Bolt Hole Spacing	105 x 77.5mm	Plate Hole	20 x 13mm
Offset	42mm	Swivel Interference	213mm
Overall Height	170mm	Swivel Radius	106.5mm
Hardness Of Tread	92±5° Shore A	Load Capacity (Dynamic)	340kgs
Load Capacity (Static)	510kgs	Temperature	-20°C to +70°C
Fork Type	Swivel Caster	Stainless	N/A
Electrical Conductivity	N/A	Anti-Static	N/A
Weight	3.99kgs	Standard	ISO22883

* For any deviation between metric and imperial spec, please refer to the metric spec.

Performance

Rolling Smoothness
Max. 5 points Score: 5

Quiet Operation
Max. 5 points Score: 5

Floor Surface Preservation
Max. 5 points Score: 5

Downloads

PDF **1102-EN-KS2026112006.pdf**
Product Data Sheet

3D **1102-CN-KS2026112006-d261120094757.rar**
3D drawings are for members only. Please log in to download.

Related Products

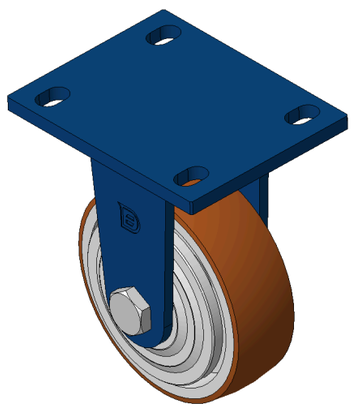

1102 B Type Caster Series
QPU (Brown round) Wheel Diameter × Wheel Width 125 x 40mm
KS-11020500531171

wheel diameter	dynamic load	overall height
125 mm	340 kg	170 mm

View specs →

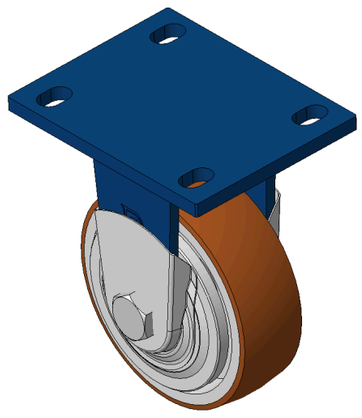

1102 B Type Caster Series
QPU (Brown round) Wheel Diameter × Wheel Width 125 x 40mm
KS-11020500531181

wheel diameter	dynamic load	overall height
125 mm	340 kg	170 mm

View specs →

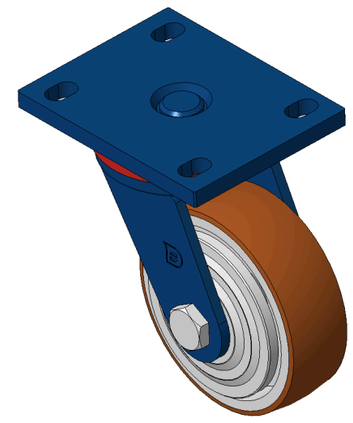

1102 B Type Caster Series
QPU (Brown round) Wheel Diameter × Wheel Width 125 x 40mm
KS-11020500532171

wheel diameter	dynamic load	overall height
125 mm	340 kg	170 mm

View specs →