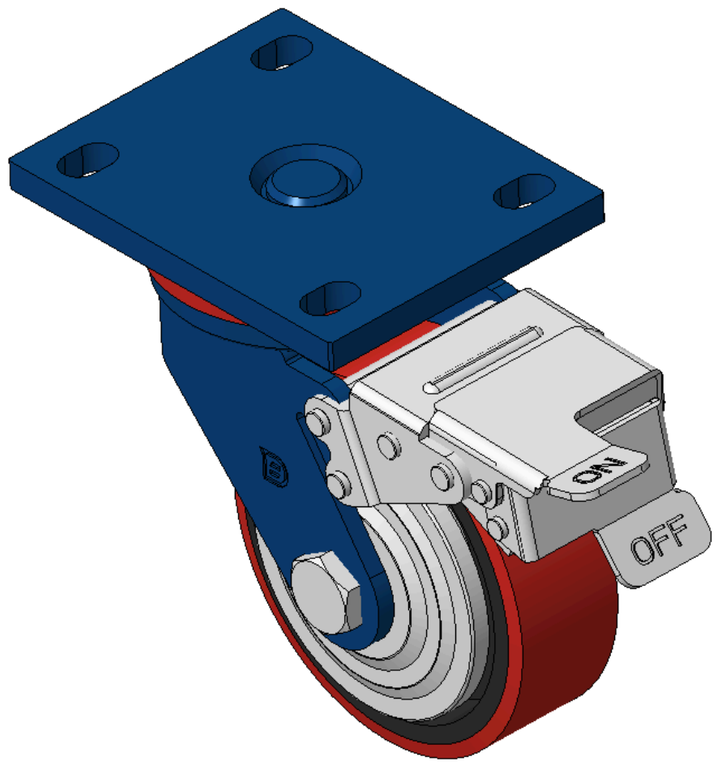

Picture may differ from original product



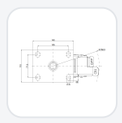

1102 B Type Caster Series

PU (red flat) Wheel Diameter × Wheel Width 125 × 40 mm

KS-11020500334031 Copy model no.

Wheel Diameter	Load Capacity (Dynamic)	Overall Height	Wheel Bearing
125mm	340kgs	170mm	Wheels With Ball Bearings

- Equipped with front brake, locking Casters, Welded Caster Fork.
- Blue painted finish, Mounting Type - Top Plate, 105x77.5mm Bolt Hole Spacing.
- Cast Iron Wheel Center, High Quality Polyurethane Wheel Tread, Cast Iron red.
- Bearings—Ball Bearings.
- Wheel tread: High-quality polyurethane wheel tread
- Wheel Center: Iron core / Cast iron core

Product descriptions are for reference only. The actual product shall prevail.

3D Drawing Request

3D drawings are for members only. Please log in to download.

Product Data Sheet

Metric | Imperial

Wheel Diameter	125mm	Wheel Width	40mm
Wheel Bearing	Wheels With Ball Bearings	Plate Size	140 x 110mm
Bolt Hole Spacing	105 x 77.5mm	Plate Hole	20 x 13mm
Offset	45mm	Swivel Interference	317mm
Overall Height	170mm	Swivel Radius	158.5mm
Hardness Of Tread	93±5° Shore A	Load Capacity (Dynamic)	340kgs
Load Capacity (Static)	510kgs	Temperature	-20°C to +70°C
Fork Type	Swivel Caster With Wheel Brake	Stainless	N/A
Electrical Conductivity	N/A	Anti-Static	N/A
Weight	4.48kgs	Standard	ISO22883

* For any deviation between metric and imperial spec, please refer to the metric spec.

Performance

Rolling Smoothness
Max. 5 points Score: 3

Quiet Operation
Max. 5 points Score: 4

Floor Surface Preservation
Max. 5 points Score: 4

Downloads

3D **1102-CN-KS2026111909-d261119140622.rar**
3D drawings are for members only. Please log in to download. ›

Related Products

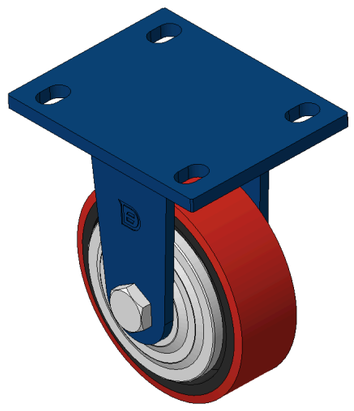

1102 B Type Caster Series
PU (red flat) Wheel Diameter × Wheel Width 125 × 40 mm
KS-11020500331031

wheel diameter	dynamic load	overall height
125 mm	340 kg	170 mm

View specs →

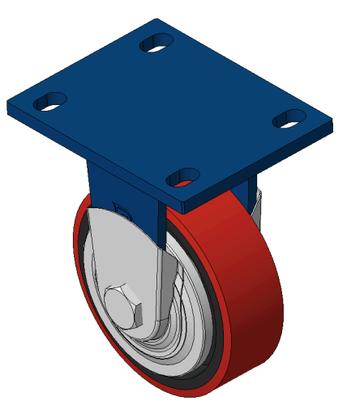

1102 B Type Caster Series
PU (red flat) Wheel Diameter × Wheel Width 125 × 40 mm
KS-11020500331041

wheel diameter	dynamic load	overall height
125 mm	340 kg	170 mm

View specs →

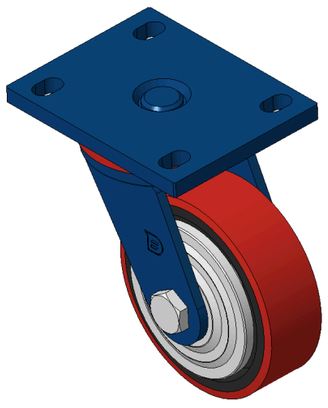

1102 B Type Caster Series
PU (red flat) Wheel Diameter × Wheel Width 125 × 40 mm
KS-11020500332031

wheel diameter	dynamic load	overall height
125 mm	340 kg	170 mm

View specs →

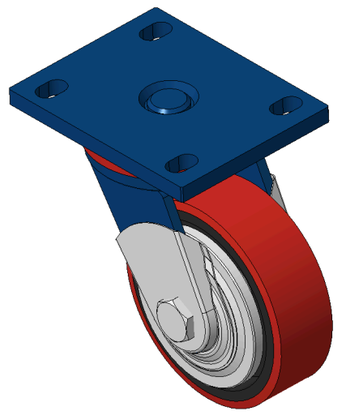

1102 B Type Caster Series
PU (red flat) Wheel Diameter × Wheel Width 125 × 40 mm
KS-11020500332041

wheel diameter	dynamic load	overall height
125 mm	340 kg	170 mm

View specs →